CORE LABS
RADIOGRAPHIC
USA

INSTALLATION & SERVICE MANUAL

"atlas" & "aries"

ELEVATING TABLE WITH FLOATING TOP (6-WAY)

MODEL#05-000

MANUAL: 05-ATLAS REVISION 6.6 DATE 04.17.17

CoRE labs ENGLEWOOD, CO U.S.A.
T. 303.761.0131 F. 303.948.8913 www.corelabshome.com

TRANSPORTATION DAMAGES

All packages should be closely examined at the time of delivery.
If damage is apparent, have a notification of "bad order" placed by the delivering driver on all copies of the freight or express bill. If damage is of a concealed nature, notify the transportation agent as soon as possible to make an "inspection report of damage" but, in any event, not later than 3 days after delivery. A transportation company usually will not pay a claim for concealed damage if an inspection is not requested within this 3-day period. If the shipment was handled by a moving van service, uncrated, call immediately when any damage is found. Do not attempt to call any local agent. At this time, be ready to describe the type of damage, type of equipment, serial number and, if possible, the job number. The above paragraph is in regard to equipment requiring installation only, and does not apply to supply items. The F.O.B. point for these item is as shown in your quotation.

SECTION 1 DESCRIPTION

1.1 GENERAL

This manual contains installation and service instructions for the "atlas" Elevating 6-Way Table.

1.2 DESCRIPTION

The "atlas" Elevating 6-Way Table is built for convenient positioning of a patient under an x-ray tube. The 84" tabletop, combined with the extended bucky travel, allows full patient coverage with less tabletop travel and can accommodate a smaller room.

The Bucky can be moved independently.

The "atlas" table is designed as a "standalone" system, consisting of a plug-in cable and single board interface compatible with standard x-ray equipment.

1.2.1 TABLETOP LOCKS

The tabletop locks are released by applying foot pressure to one of the pedals located on both ends of the table front, marked "LOCKS". This will disable the 24VDC from tabletop locks and free tabletop for longitudinal and transverse movement simultaneously.

1.2.2 ELEVATION

Tabletop height is adjustable from 22" to 34" to accommodate ambulatory, wheel chair, or gurney patients. Easier transfer is accomplished for both patient and operator. With the "atlas" Elevating Table the operator can easily and quietly elevate and accurately position a patient weighting up to 650 pounds. When installed with compatible equipment and "continuous SID monitor" option, positioning and exposure can be accomplished at any table height.

1.2.3 TABLE TOP MOVEMENT

The "atlas" Elevating 6-Way Table has a four-way tabletop movement, plus/minus 17" longitudinal, and plus/minus 5" transverse -- locked in position by a set of power -on electro-magnetic locks.

The vertical movement is motorized and controlled by pressing pedals marked "UP" or "DOWN".

1.2.4 BUCKY

The Bucky is placed in the Bucky frame located under the tabletop and has a film plane distance to the tabletop of approximately 2.30 inches (Depending on the model and configuration used).
Longitudinal Bucky movement is accomplished by pressing the switch located at the right side of the Bucky.

1.3 SPECIFICATIONS

Power requirement: 115 VAC, 50/60 Hz, 10 Amps (15 amp breaker).
Maximum patient weight: 650 lbs.
Compliance: CDRH 21 CFR, Chapter 1, Subchapter J at time of manufacture.

1.4 OPTIONS

Continuous SID Interface
Patient Hand Grips
Carbon Fiber Tabletop
Bucky
Tray
Ion Chamber
Grid
Lateral Cassette Holder

1.5 DIMENSIONS

1.	Tabletop:	84″ x 30.25″ (2134 mm x768 mm)
2.	Tabletop Height (motor driven):	23″ – 34″ (584 mm to 864 mm)
3.	Side Clearance:	plus/minus 17″ (864 mm)
4.	Front & Back Clearance:	plus/minus 5″ (127 mm)
5.	Table Pedestal Length:	50.75″ (1289 mm)
6.	Table Pedestal Width:	28.37″ (721 mm)

TRANSPORTATION WEIGHT: 620 lbs.

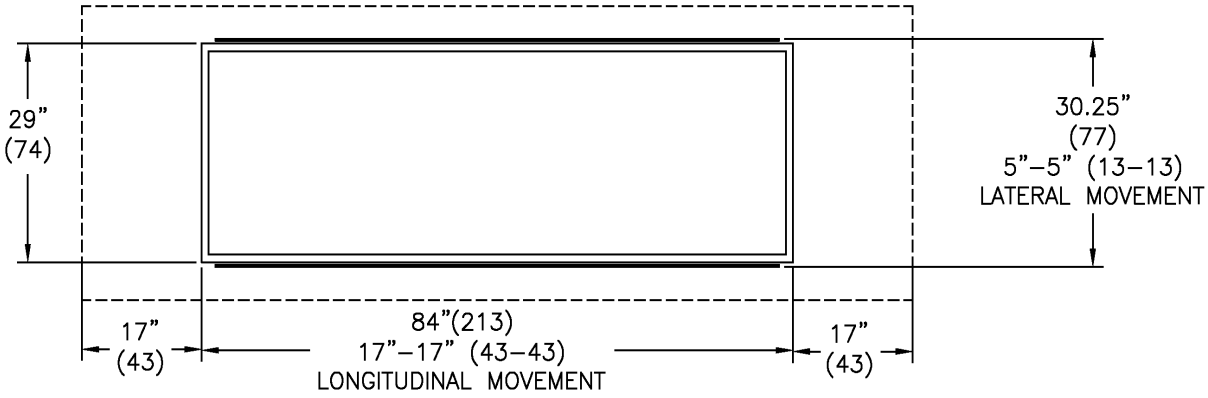

PLAN

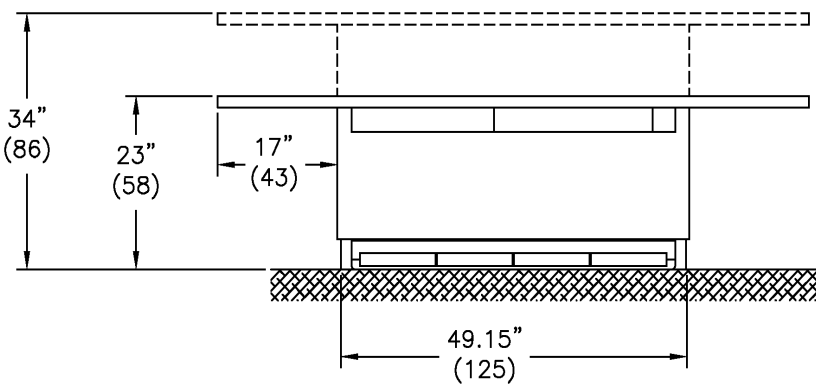

FRONT ELEVATION

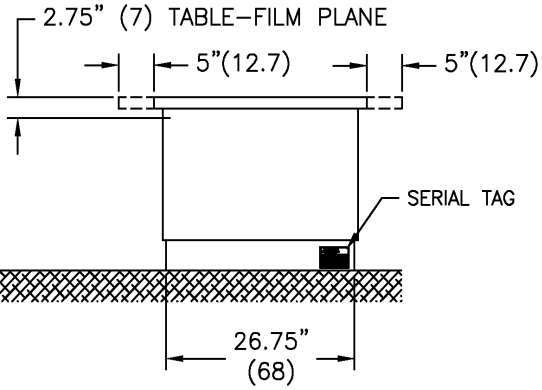

SIDE ELEVATION

SECTION 2 INSTALLATION

2.1 GENERAL

This section contains installation procedures of the "atlas" table and ancillary equipment.

Because this table will be installed and interfaced with other system components, installer should consult and reference related component service manuals and installation requirements to insure compatibility and safety.

2.2 UNPACKING AND HANDLING

Upon receipt of the table, carefully inspect it for damage, which may have occurred during shipment. If there is any evidence of mishandling or damage, promptly document the damage and notify the carrier.

CAUTION

Use suitable lifting devices for transporting the table to the installation site. Place all components as close as possible to the installation area to avoid excessive movement after unpacking.

2.3 REQUIRED TOOLS

*Lifting devices suitable for transporting the Table.
*Level – 5 foot long.
*Standard set of hand tools for table installation.

CAUTION

All local building codes and regulations for electrical and mechanical requirements must be adhered to.

2.5 MECHANICAL INSTALLATION

a. Transport the table body package as close as possible to the installation place.
b. Unpack table body package.
b. Loosen the side screw on the upper front cover.
c. Lift the cover up and away from the table.
d. Remove the red shipping bracket as shown on Figure 2-5. This shipping bracket may or may not be present, depending on your packaging style -- if it is not present, ignore this section.

Figure 2-5

e. Ensure that the table is parallel to and in the proper distance from the tubestand rails.
f. Use the four mounting holes as a template and mark the position of the anchor bolts. IT IS RECOMMENDED NOT TO DRILL AND ANCHOR ANY TABLE INTO PLACE UNTIL YOU ARE ABSOLUTELY SURE OF THE POSITION REQUIRED (POSITION IN RELATION TO THE TUBE STAND/CRANE AND/OR WALL STAND).
g. The mounting holes are in each corner of the table near the leveling feet (4 thru-holes in the steel gussets).

Anchor the table using one of the following methods:

a. If the floor is concrete, use all purpose anchor bolt-for concrete, block & brick. We suggest removable hardware with sunk-in anchors 3/8 diameter. Use of hardware with permanently protruding studs will make for table relocation difficult).
b. If the floor is not concrete, drill through and use suitable mounting hardware.

Place the level on the table and adjust the leveling screws as necessary to level the table base. Secure the table in place with hardware described above
If not already installed, place Bucky in Bucky Mounting Frame and secure with screws. Attach the plastic Bucky cover and fasten with provided Bucky finger guards on front and back of Bucky.

2.5.1 MOUNTING THE TABLETOP

.....your tabletop is shipped in a separate crate from the table base.....

a. Remove the retaining screws to the longitudinal lock and allow the lock to hang free. Your longitudinal lock will likely not be installed but ensure it is not for the tabletop cannot be installed with the longitudinal lock assy affixed in its mounting place. Failure to remove this longitudinal lock assembly will prevent tabletop installation and the longitudinal lock assembly can be permanently damaged.

b. Remove the retaining screws and stops angle/rubber bumper from the tabletop to allow top to slide over the module assembly. There are two of these but you likely only need to remove one side.

c. Position the tabletop so that the longitudinal lock strip on the underside of the table will be at the back of the table where the longitudinal lock assembly wire harness is located. SLOWLY slide the Tabletop on to the module assembly making sure that all bearings are inside the channels.

d. Use a 5/8" open-end wrench to adjust the eccentrics behind the four vertical bearings. This is likely not necessary as your tabletop was adjusted prior to shipment. Adjust until there is minimal vertical movement and the tabletop moves freely (see item 8 on DWG 511018).

e. Adjust the two transverse locating bearings until there is a minimal transversal movement and the Tabletop moves freely. Again, this is likely not necessary as your tabletop was adjusted prior to shipment.

f. Reattach the stop angle/rubber bumper(s).

g. Re-attach the longitudinal lock -- adjust lock distance to brake strip with setscrews on back flange of mounting bracket.

2.6 ELECTRICAL CONNECTIONS

The "atlas" elevating table requires a 115 VAC, 15 Amps 60/50 Hz electrical connection (alternate 240VAC wiring is provided).

For more electrical details, please refer to ELECTRICAL SCHEMATICS AND DIAGRAMS

SECTION 3 RECOMMENDED MAINTENANCE

To achieve optimal table performance and long lasting operation, the following basic maintenance procedures should take place every six months:

- Clean and check Table Top bearings and tracks -- the longitudinal bearings are meant to run sealed, not maintainable. The transverse bearing assy's and bars can be cleaned with a dry cloth and lubricated with a light film of white lithium grease.
- Check Bucky operation
- Check Bucky Tray
- Check Locks operation and wires external condition
- ***VERIFY WIRES TO LOCK ASSY's ARE IN GOOD CONDITION AND NOT RUBBING AGAINS ANY MOVING PARTS***

SECTION 4 ELECTRICAL SCHEMATICS AND DIAGRAMS

1.	******	Wiring Chart
2	502001	Wiring Diagram
3	502002	Table Control Schematic

SECTION 5 ASSEMBLY DRAWINGS

The following drawings will be helpful for construction understanding and parts ordering:

1	511000-D	"atlas" Elevating Pedestal Table – Dimensions
2	511000	"atlas" Elevating Pedestal Table
3	511002	Frame / Scissor
4	511011	Switch Plate
5	511013	Pedal
6	511018	Table Top Module
7	511022	Longitudinal Lock
8	511023	Transverse Lock
9	511024	Table Top
10	511026	Block & Bearing
11	511028	Ball Bearing
12	511030	Bucky Lock
13	511034	Bucky Switch
14	511040	Bucky Mounting Frame
15	511211	Potentiometer (Continuous S.I.D. Tracking Option Only)

FOR REFERENCE ONLY -- USE BUCKY MANUFACTUIRER SUPPLIED WIRING INFORMATION

ATLAS / ARIES WIRING INFORMATION

ION CHAMBER CABLE

Ion Chamber	Description	Color	PCB
1	IC voltage N/R	Black	P14-1
2	Field 2 Select	Red	P14-2
3	Field 1 Select	Orange	P14-3
4	Reset	Yellow	P14-4
5	Output	Green	P14-5
6	Field 3 Select	Blue	P14-6
7	- Supply	Violet	P14-7
8	+ Supply	Gray	P14-8
9	Ground	White	P14-9

Or Shielded Assy

SIZE SENSING

15 cond. cable

Bucky Term.	Description	Color	Table TB1
1 - 4	X - Y Common	Green	25
5	Y Sense	Violet	26
8	X Sense	Red	27
2 - 3 - 6	Input	Gray	28
7	Cassette Present	Brown	29

BUCKY

Bucky Term.	Description	Color	Table TB1
		Orange	30
		Yellow	31
		Blue	32
		White	33
		Black	34

See Bucky Mfr. Info - Various Types/Various Wiring

BUCKY SW / LOCK

	Description	Color	Table TB1
P28-3	24 vdc ret.	Red / Black	21
P28-1	Bucky Lock	Red / Gray (Green)	24
J27-3	24 vdc	Pink	22
J27-1	Bucky Sw.	Red / Orange	23

P 20

P 20	Description	Color	Table TB1
* 1	Exp 1	Black	19
2	Bucky Sw	White	23
3	24 vdc	Blue	22
* 4	Exp 2	Red	20
5	Bucky Lock	Brown	24
6	24 vdc ret.	Green	21

FOOT SWITCHES

FT. Sw	Description	Color	Table PCB
Lock Sw NO	Lock Switch	Red	P11-1
Lock Sw C	Lock Sw	Black	P11-2
Up Sw NO	Up	Orange (Brown)	P1-1
Dn Sw NO	Down	Blue (White)	P1-2
Up/Dn Sw C	Up/Down Common	Green	P1-3

(ALTERNATE COLORS)

**P20, position 1 & 4 are for use with Non-CoRE labs tables in conjunction with J19 (limit switch for "working-height" or "top-height").*

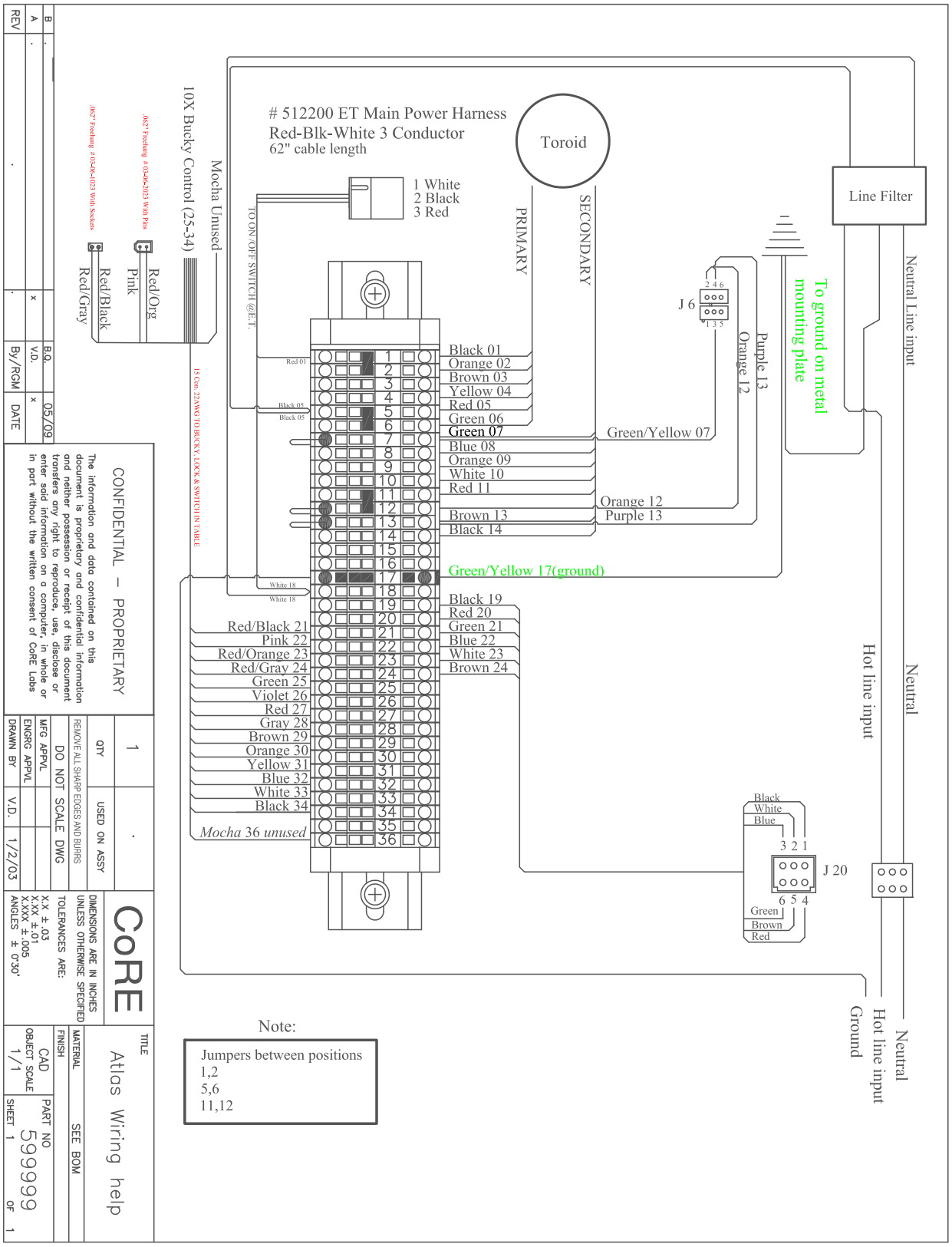
512200 ET Main Power Harness
Red-Blk-White 3 Conductor
62" cable length
Toroid
1 White
2 Black
3 Red
PRIMARY
SECONDARY
Line Filter
Neutral Line input
To ground on metal mounting plate
Hot line input
Neutral
Hot line input
Ground
Neutral
J 6
2 4 6
1 3 5
Purple 13
Orange 12
Black 01
Orange 02
Brown 03
Yellow 04
Red 05
Green 06
Green 07
Green/Yellow 07
Blue 08
Orange 09
White 10
Red 11
Orange 12
Purple 13
Brown 13
Black 14
Green/Yellow 17(ground)
Black 19
Red 20
Green 21
Blue 22
White 23
Brown 24
Red/Black 21
Pink 22
Red/Orange 23
Red/Gray 24
Green 25
Violet 26
Red 27
Gray 28
Brown 29
Orange 30
Yellow 31
Blue 32
White 33
Black 34
Mocha 36 unused
Black
White
Blue
3 2 1
J 20
6 5 4
Green
Brown
Red
Mocha Unused
10X Bucky Control (25-34)
TO ON/OFF SWITCH @E.T.
Red/Org
Pink
Red/Black
Red/Gray
Red 01
Black 05
Black 05
White 18
White 18
15 Con. 22AWG TO BUCKY, LOCK & SWITCH IN TABLE
Note:
Jumpers between positions
1,2
5,6
11,12
CONFIDENTIAL – PROPRIETARY
The information and data contained on this document is proprietary and confidential information and neither possession or receipt of this document transfers any right to reproduce, use, disclose or enter said information on a computer, in whole or in part without the written consent of CoRE Labs
CoRE
Atlas Wiring help
DO NOT SCALE DWG
REMOVE ALL SHARP EDGES AND BURRS
DIMENSIONS ARE IN INCHES UNLESS OTHERWISE SPECIFIED
TOLERANCES ARE:
X.X ± .03
X.XX ± .01
X.XXX ± .005
ANGLES ± 0°30'
SEE BOM
599999
1/1
1/2/03
B
A
REV
05/09
B.Q.
V.D.
By/RGM
DATE

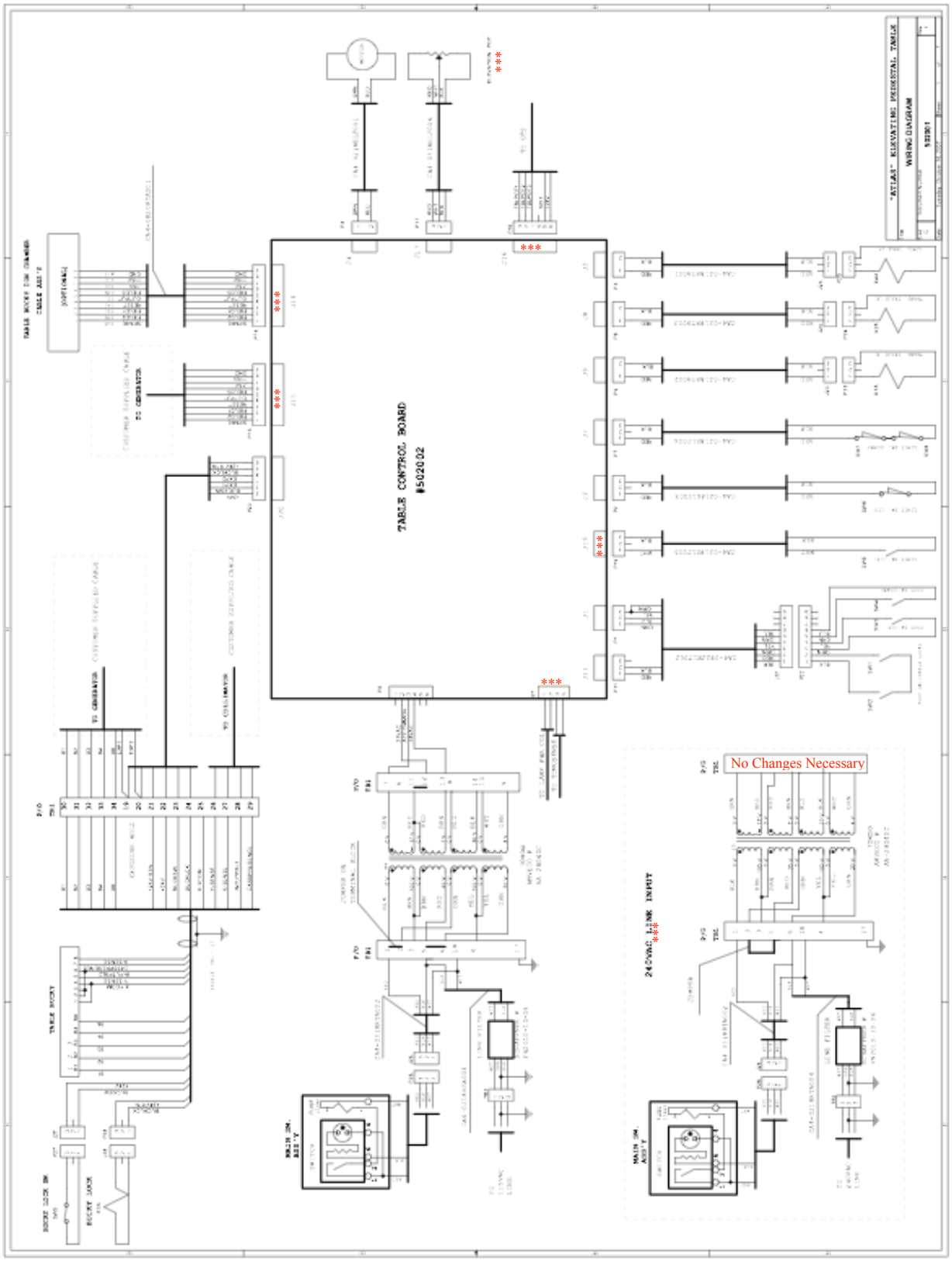

OPTIONAL CONFIGURATION/CONNECTIVITY SHOWN WITH ASTERISKS

OPTIONAL 240VAC CONNECTIVITY

Your atlas table has been wired for 115VAC connectivity.

To reconfigure your table to accept 240VAC input, make the following changes:

*******Turn off power at breaker for safety********

On the main table PC board, disconnect P6 from J6 during this process. You will reconnect it later after wiring changes are complete and output test is performed (output test from P6).

A. On TB1 -- main terminal strip shown on page 12 above, remove jumpers from between 1&2, 5&6, 11&12. Discard these as they will not be needed.

B. This installation is assuming your 240VAC is supplied with twin hot (2 independent) leads. Other 240VAC connections are not supported. Connect your twin, 240VAC hot leads into outside positions on the 3-position Euro Strip table input (TB2). Be sure to connect a third conductor for a ground to the middle Euro Strip terminal.

C. Create a Jumper from a spare piece of 18AWG 300V insulted or better wire, 5 inches long. Connect this jumper from TB1 - position 2, to TB1 - position 5.

D. From Main Table On/Off Assembly connected to TB1 (Main SW Assy), remove black wire out of TB1- position 5, and reinstall it to TB1 - position 6 (as shown on document number 502001 in 240VAC line input subsection).

Turn power back on at breaker and be mindful of electrical safety when performing the following test as there will be dangerous voltage present at any and all wires/terminals/ connections.

Verify that you have approximately 24VAC outputting from the Line/Switch/Toroid/TB1. To do this verification, find the previously disconnected P6. You should find that 24VAC should be present between the Violet and Orange wires. Once you have verified that 24VAC is present, switch power off at main table switch (Main SW Assy) and then reconnect P6 to J6 on your main PC board. Your conversion to 240VAC line input is now complete.

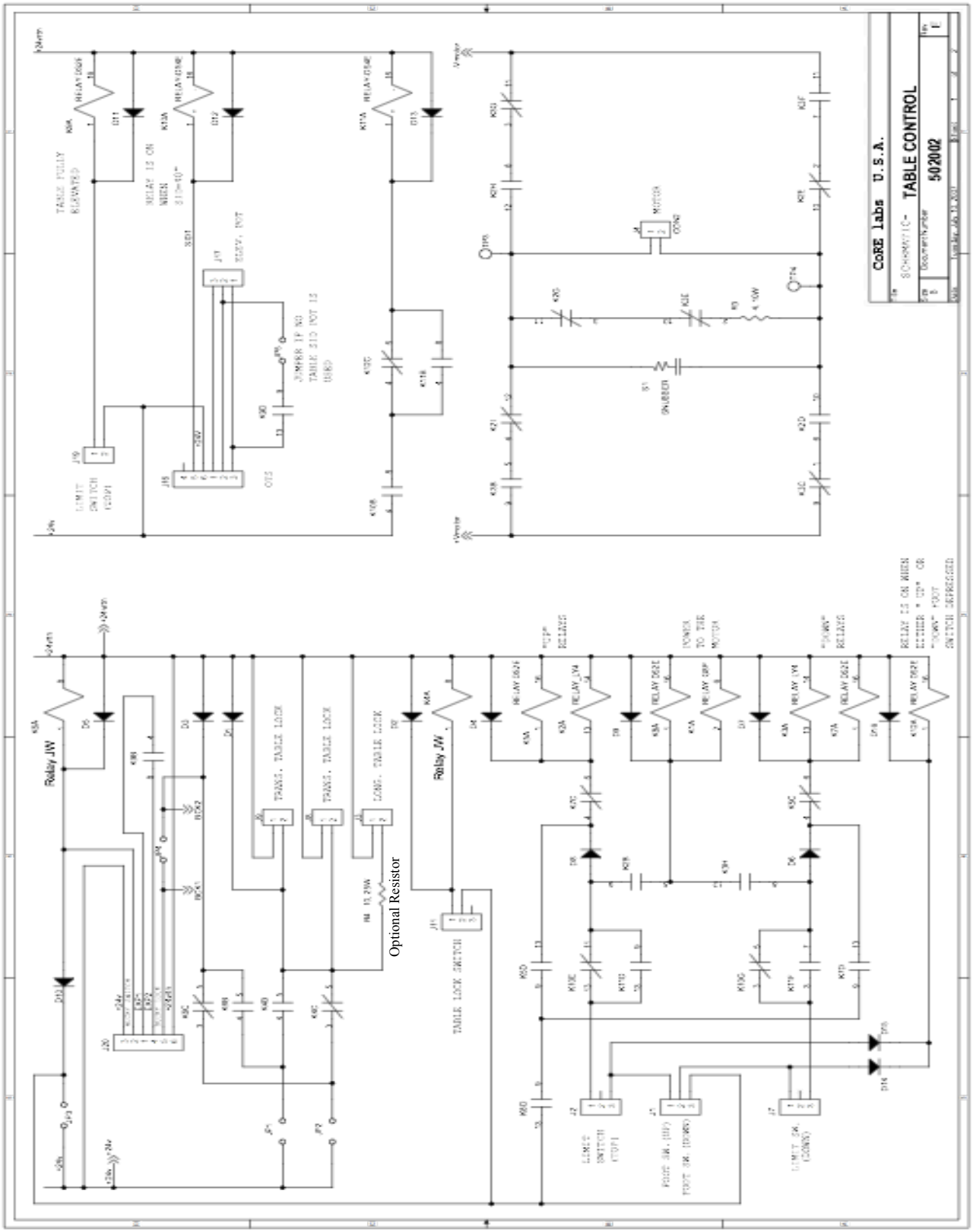
CoRE labs U.S.A.
TABLE CONTROL
502002
Relay JW
TABLE LOCK SWITCH
Optional Resistor

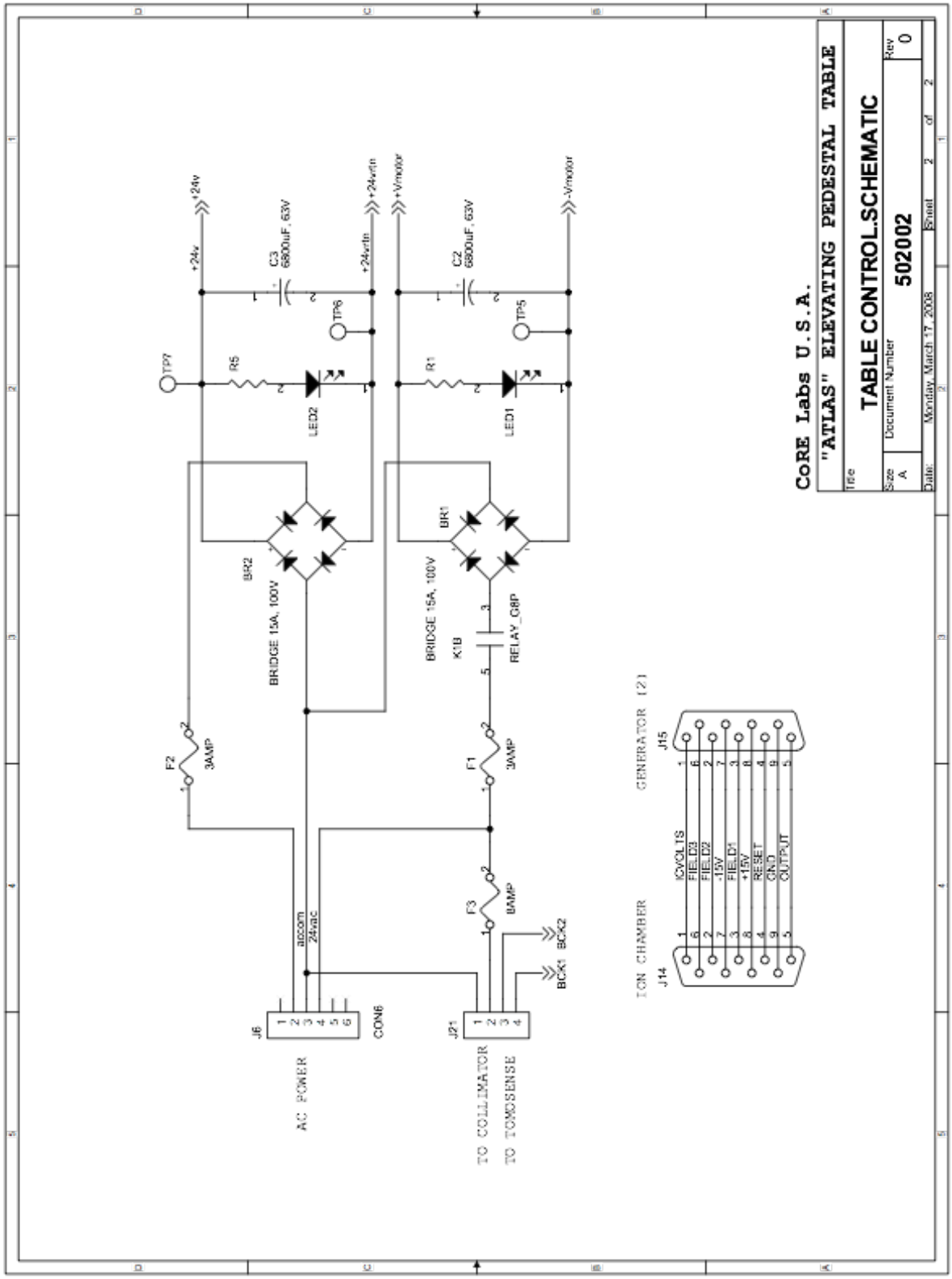
CoRE Labs U.S.A.
"ATLAS" ELEVATING PEDESTAL TABLE
Title
TABLE CONTROL.SCHEMATIC
Size A
Document Number
502002
Rev 0
Date: Monday, March 17, 2008
Sheet 2 of 2
+24v
C3 6800uF, 63V
+24vrtn
+Vmotor
C2 6800uF, 63V
-Vmotor
TP6
TP5
TP7
R5
R1
LED2
LED1
BR2
BR1
BRIDGE 15A, 100V
BRIDGE 15A, 100V
K1B
RELAY_08P
F2 3AMP
F1 3AMP
F3 8AMP
acom
24vac
BCK1 BCK2
J6
CON6
J21
AC POWER
TO COLLIMATOR
TO TCMSSENSE
ION CHAMBER
J14
GENERATOR (2)
J15
ICVOLTS
FIE_D3
FIE_D2
-15V
FIE_D1
+15V
RESET
Clk1
OUTPUT

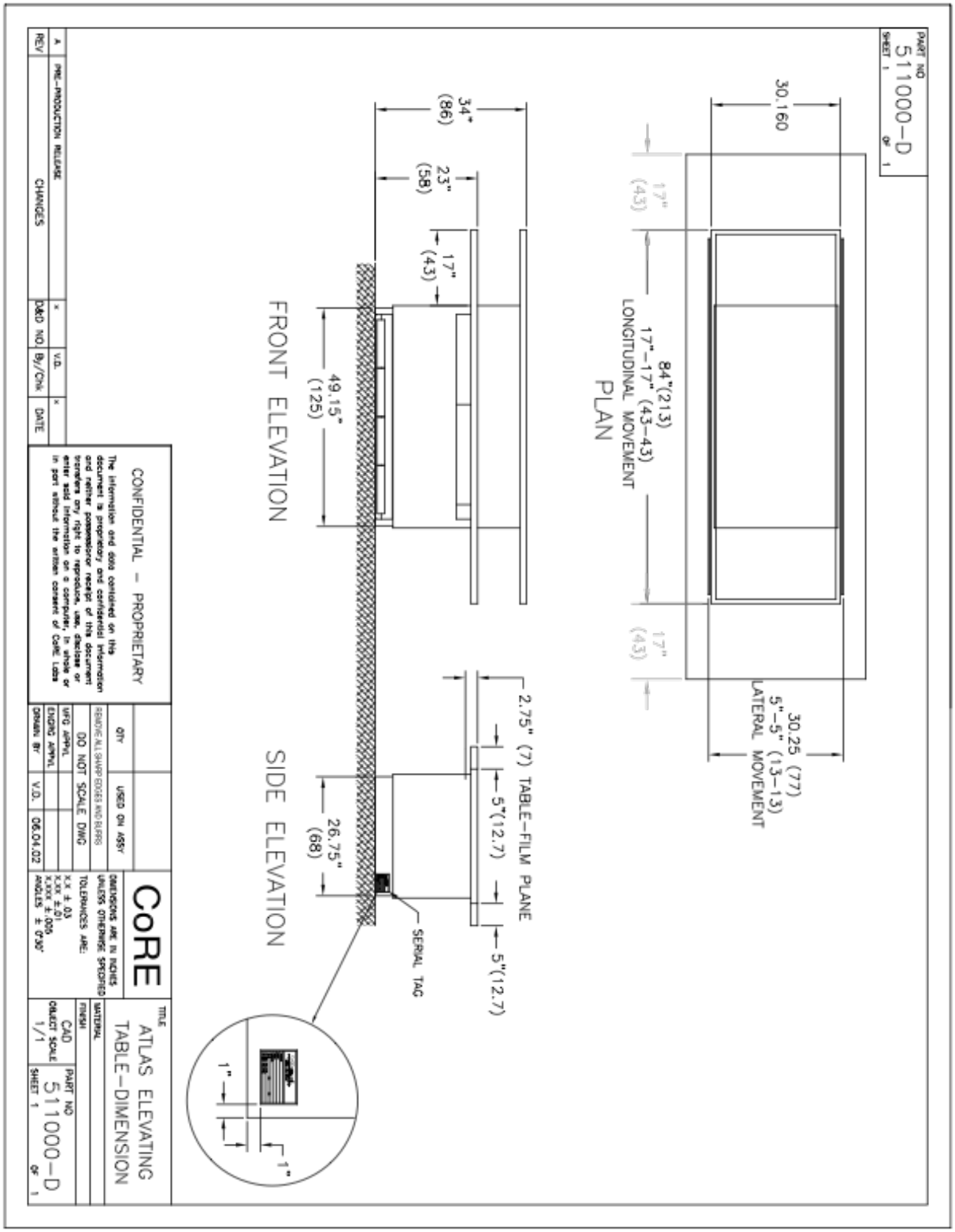
PART NO
511000-D
SHEET 1 OF 1
30.160
17" (43)
84"(213)
17"-17" (43-43)
LONGITUDINAL MOVEMENT
PLAN
30.25 (77)
5"-5" (13-13)
LATERAL MOVEMENT
17" (43)
34" (86)
23" (58)
17" (43)
49.15" (125)
FRONT ELEVATION
2.75" (7) TABLE-FILM PLANE
5"(12.7)
5"(12.7)
26.75" (68)
SIDE ELEVATION
SERIAL TAG
1"
1"
CONFIDENTIAL - PROPRIETARY
The information and data contained on this document is proprietary and confidential information and neither possession nor receipt of this document transfers any right to reproduce, use, disclose or enter said information on a computer, in whole or in part without the written consent of CoRE Labs
REV
PRE-PRODUCTION RELEASE
CHANGES
DWG NO
By/Chk
DATE
V.D.
CoRE
QTY
USED ON ASSY
REMOVE ALL SHARP EDGES AND BURRS
DO NOT SCALE DWG
MFG APPVL
ENGRG APPVL
DRAWN BY
V.D.
06.04.02
DIMENSIONS ARE IN INCHES UNLESS OTHERWISE SPECIFIED
TOLERANCES ARE:
X.X ± .03
X.XX ± .01
X.XXX ± .005
ANGLES ± 0°30'
TITLE
ATLAS ELEVATING TABLE-DIMENSION
MATERIAL
FINISH
CAD OBJECT SCALE 1/1
PART NO
511000-D
SHEET 1 OF 1

PART NO
511000
SHEET 1 OF 2

26	541111	COVER	1
27	541112	COVER	1
28	511017	PANEL BOX	1
29	511012	ASSY–PCB PLATE	1
30	541117	COVER	1
31	511019	HAND GRIP	2
32	531130	BRACKET–TRANSVERS. LOCK	2
33	541152	ANGLE–BUMPER STOP	2
34	907–032–06–10	SCR.#10–32x.38 TRUSS HD	32
35	904–032–06–04	SCR.#10–32x.38 PAN HD	27
36	902–032–08–02	SCR. #10–32x1/2 BUTT. HD	4
37	901–032–08–02	SCR.#10–32x.1/2 SOC. HD	8
38	907–632–04–04	SCR.#6–32x1/4 TRUSS HD	4
39	907–832–04–04	SCR.#8–32x1/4 TRUSS HD	8
40	904–632–04–02	SCR.#6–32x1/4 PAN HD	14
41	902–0420–08–02	SCR.1/4–20x1/2 BUTT HD	2
42	905–032–06–04	SCR.#10–32x3/4 FLAT HD	4
43	901–032–10–02	SCR.#10–32x5/8 SOC. HD	12
44	904–032–08–04	SCR.#10–32x1/2 PAN HD	3
45	930007	FLAT WASHER #10	18
46	901–032–20–02	SCR.#10–32x1.25 SHMS	1
47	922007	KEPS NUT #10–32	1
48	930006	LOCK WASHER #10	8
49	990001	LOCTITE (BLUE)	A/R
50	511211	ASSY.–POT	1
51	904–032–22–04	SCR. #10–32x1.38 PAN HD	2

BILL OF MATERIAL

ITEM	PART NO.	DESCRIPTION	QTY
1	511040	BUCKY MOUNTING FRAME	1
2	551124	HIGH SPEED BUCKY	1
3	511002	SCISSOR FRAME ASS'Y	1
4	541004	PANEL–FRT. LOW. FIXED	1
5	511005	LOWER SHROUD –WELD.	1
6	531006	SHIPMENT BRACKET	1
7	511011	SWITCH PLATE ASS'Y	1
8	511008	UPPER SHROUD – WELD.	1
9	541091	FRONT PANEL	1
10	511013	PEDAL ASS'Y	1
11	511018	TABLE TOP MODULE ASS'Y	1
12	511009	ASSY–FINGER GUARD	2
13	511022	LONG TOP LOCK ASS'Y	1
14	511023	TRANS. LOCK ASS'Y	2
15	511024	TABLE TOP ASS'Y	1
16	541141	TRACK–FRONT BUCKY	1
17	541142	TRUCK–REAR BUCKY	1
18	541143	COVER–LH BOTTOM	1
19	541144	COVER–RH BOTTOM	1
20	571145	COVER–BUCKY	1
21	541146	CLIP–FRONT COVER	3
22	571219	BUCKY STOPPER	2
23	541155	COVER–BUCKY TERMINAL	1
24	541157	SPACER–FRONT COVER CLIP	3
25	511030	BUCKY LOCK	1

REV	CHANGES	D&D NO.	By/Chk	DATE
B				03/28/01
A	PRE–PRODUCTION RELEASE			

QTY	USED ON ASSY
REMOVE ALL SHARP EDGES AND BURRS	
DO NOT SCALE DWG	
MFG APPVL	
ENGRG APPVL	
DRAWN BY	KJK 05/26/00

CoRE

DIMENSIONS ARE IN INCHES UNLESS OTHERWISE SPECIFIED

TOLERANCES ARE:
X.X ± .03
X.XX ± .01
X.XXX ± .005
ANGLES ± 0°30'

TITLE
"ATLAS" –ELEVATING PEDESTAL TABLE

MATERIAL
FINISH

CAD OBJECT SCALE 1/1

PART NO 511000
SHEET 1 OF 2

CoRE labs ENGLEWOOD, CO U.S.A.
T. 303.761.0131 F. 303.948.8913 www.corelabshome.com
FORM: MANUAL-05-ATLAS

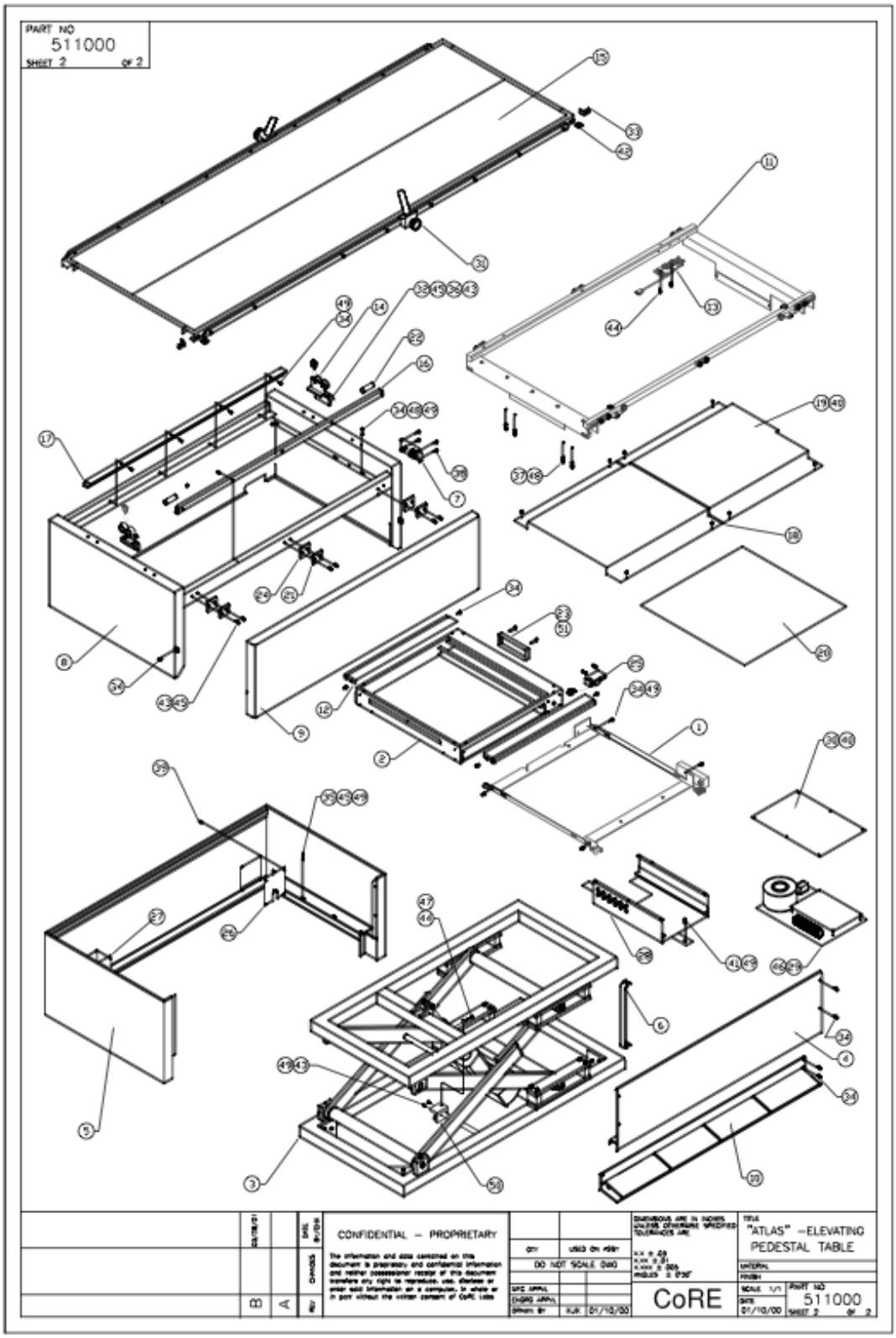
PART NO
511000
SHEET 2 OF 2
CONFIDENTIAL – PROPRIETARY
DO NOT SCALE DWG
"ATLAS" –ELEVATING PEDESTAL TABLE
CoRE
511000

PART NO 511002
SHEET 1 OF 2

23	901-0813-36-04	HSHMS 1/2-13x2.25	4
24	901-0616-20-01	HSHMS 3/8-16x1.25	16
25	901-0420-28-01	HSHMS 1/4-20x1.75	2
26	915-0420-08-20	HSSET 1/4-20x.5	8
27	904-032-08-04	PHMSP #10-32x.5	4
28	931-10-00-04	LOCK WASHR #10	4
29	923-0813-00-04	HEX THIN (JAM) NUT 1/2-13	4
30	930023	FLAT WASHER 1/2	2
31	930019	FLAT WASHER 3/8	2
32	931014	LOCK WASHER 1/2	4
33	931008	LOCK WASHER 1/4	2
34	931012	LOCK WASHER 3/8	12
35	990001	LOCTITE-BLUE	

BILL OF MATERIAL

ITEM	PART NO.	DESCRIPTION	QTY
1	521005	TOP FRAME ASS'Y	1
2	521006	BASE FRAME ASS'Y	1
3	521008	SCISSOR-OUTER	1
4	521007	SCISSOR-INNER	1
5	531066	SCISSOR SHAFT	1
6	531067	SCISSOR SHAFT	1
7	531068	SCISSOR SHAFT	1
8			
9	531052	TRACK-UPPER	4
10	531188	ACTUATOR-MACH.	1
11	531056	CLEVIS PIN-UPPER/LOVER	2
12	551110	BRONZE BEARING	4
13	551110-2	BRONZE BEARING-MACH.	2
14	531055	BUSHING SHAFT	2
15	541071	BRACKET-LIMIT SWITCH	2
16	551042	SWITCH	4
17	531070	NUT PLATE	2
18	551059	BUSHING	6
19	929015	CAM FOLLOWER ø1.75x1.06	4
20	961003	COTTER PIN	4
21	531039	SCREW-LEVELER	4
22	531166	SPACER	A/R

REV	CHANGES	D&D NO.	By/Chk	DATE
B	DELITE IT B		VD	7/11/03
A	PRE-PRODUCTION RELEASE			

1	511000	
QTY	USED ON ASSY	
REMOVE ALL SHARP EDGES AND BURRS		
DO NOT SCALE DWG		
MFG APPVL		
ENGRG APPVL		
DRAWN BY	KIK	01/10/00

CoRE

DIMENSIONS ARE IN INCHES UNLESS OTHERWISE SPECIFIED
TOLERANCES ARE:
X.X ± .03
X.XX ± .01
X.XXX ± .005
ANGLES ± 0°30'

TITLE ASSY-FRAME/SCISSOR
MATERIAL SEE BOM
FINISH –
CAD OBJECT SCALE 1/1
PART NO 511002
SHEET 1 OF 2

CoRE labs ENGLEWOOD, CO U.S.A.
T. 303.761.0131 F. 303.948.8913 www.corelabshome.com
FORM: MANUAL-05-ATLAS

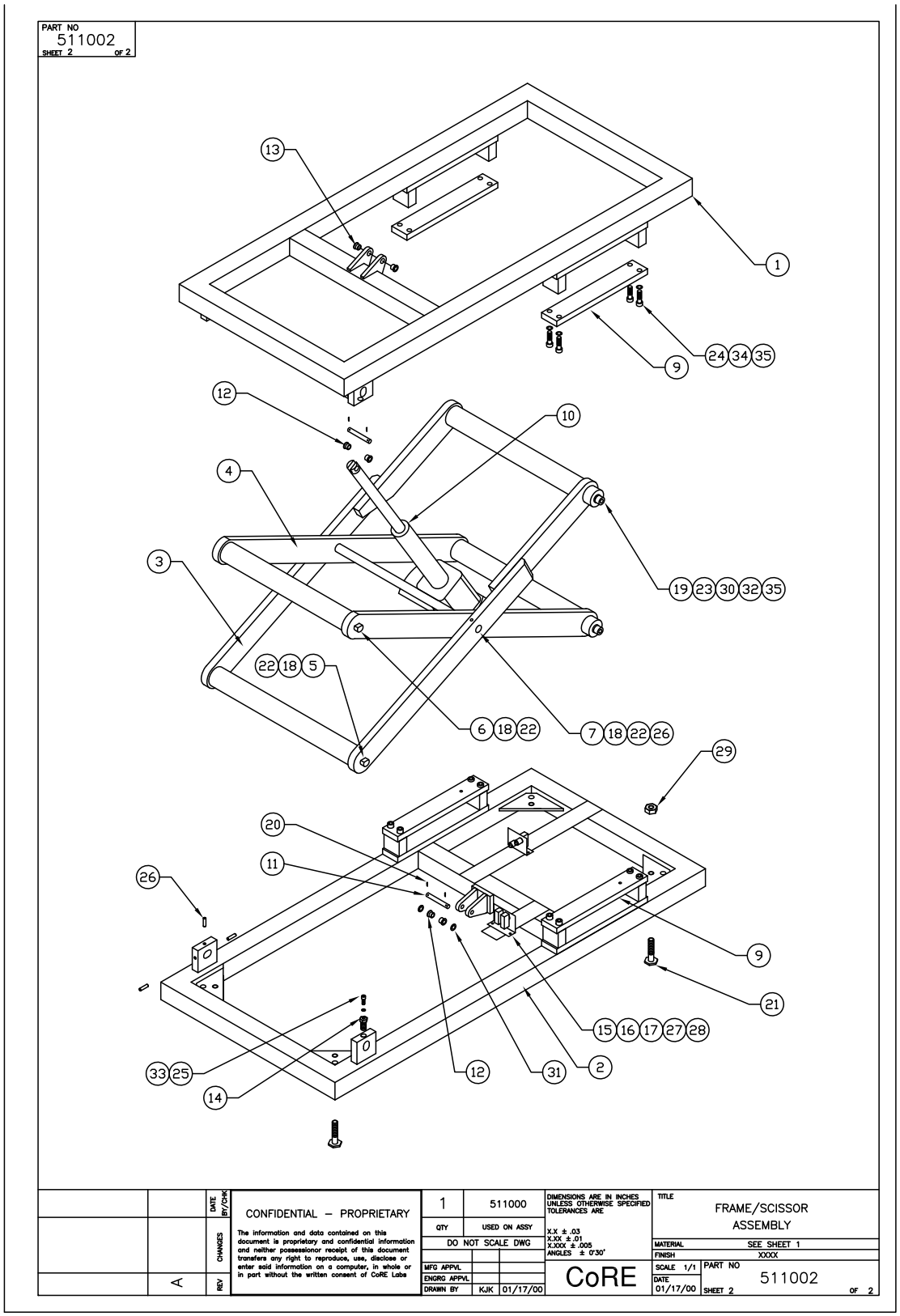
PART NO
511002
SHEET 2 OF 2
13
1
24 34 35
9
12
10
4
3
19 23 30 32 35
22 18 5
6 18 22
7 18 22 26
29
20
11
26
9
21
15 16 17 27 28
33 25
14
12
31
2
CONFIDENTIAL – PROPRIETARY
The information and data contained on this document is proprietary and confidential information and neither possessionor receipt of this document transfers any right to reproduce, use, disclose or enter said information on a computer, in whole or in part without the written consent of CoRE Labs
DATE
BY/CHK
CHANGES
REV
A
1
511000
QTY
USED ON ASSY
DO NOT SCALE DWG
MFG APPVL
ENGRG APPVL
DRAWN BY
KJK
01/17/00
DIMENSIONS ARE IN INCHES UNLESS OTHERWISE SPECIFIED TOLERANCES ARE
X.X ± .03
X.XX ± .01
X.XXX ± .005
ANGLES ± 0°30'
CoRE
TITLE
FRAME/SCISSOR ASSEMBLY
MATERIAL SEE SHEET 1
FINISH XXXX
SCALE 1/1
DATE 01/17/00
PART NO
511002
SHEET 2 OF 2

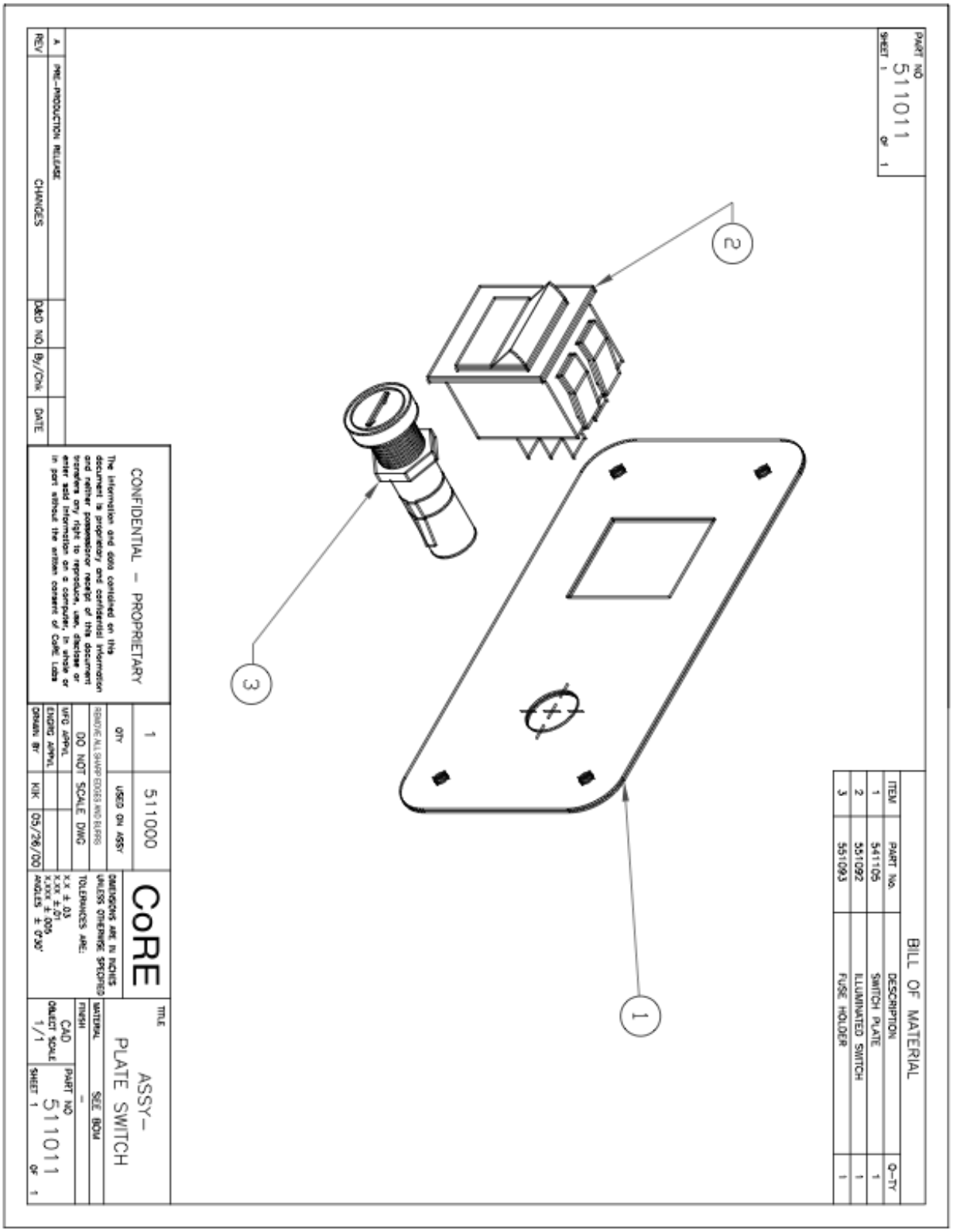
PART NO
511011
SHEET 1 OF 1
BILL OF MATERIAL
ITEM PART No. DESCRIPTION Q-TY
1 541105 SWITCH PLATE 1
2 551092 ILLUMINATED SWITCH 1
3 551093 FUSE HOLDER 1
1
2
3
REV CHANGES D&ED NO. By/Chk DATE
A PRE-PRODUCTION RELEASE
CONFIDENTIAL – PROPRIETARY
The information and data contained on this document is proprietary and confidential information and neither possession or receipt of this document transfers any right to reproduce, use, disclose or enter said information on a computer, in whole or in part without the written consent of CoRE Labs
1 511000
QTY USED ON ASSY
REMOVE ALL SHARP EDGES AND BURRS
DO NOT SCALE DWG
MFG APPVL
ENGRG APPVL
DRAWN BY KIK 05/26/00
CoRE
DIMENSIONS ARE IN INCHES UNLESS OTHERWISE SPECIFIED
TOLERANCES ARE:
X.X ± .03
X.XX ± .005
X.XXX ± .005
ANGLES ± 0°30'
TITLE
ASSY-
PLATE SWITCH
MATERIAL SEE BOM
FINISH –
CAD OBJECT SCALE 1/1
PART NO 511011
SHEET 1 OF 1

PART NO 511013
SHEET 1 OF 2

BILL OF MATERIAL

ITEM	PART NO.	DESCRIPTION	QTY
1	541103	PEDAL	1
2	531098	PLATE–PEDAL	4
3	531099	BLOCK–PEDAL	8
4	531100	BRACKET–PEDAL	8
5	531102	SHAFT–PEDAL	4
6	531101	BRACKET–SWITCH	4
7	551096	SWITCH SPDT	4
8	551104	TORSION SPRING	4
9	551097	ANTI–SLIP	4
10	904–032–06–04	PHMSP #10–32x3/8	16
11	904–256–10–01	PHMSP #2–56x5/8	8
12	905–032–08–04	FHMSP #10–32x1/2	8
13	915–032–06–20(CU)	HSSET #10–32x3/8	8
14	915–1–0420–06–10	SCR. 1/4–20 x 3/8 SET	4
15	930–10–00–04	FLAT WASHER #10	24
16	930020	WASHER ø3/8x3/4x1/16 NYLON	8
17	990–01	LOCTITE (BLUE)	A/R
18	944007	SELF–LOCKING RETAINING RING	8

REV	CHANGES	D&D NO.	By/Chk	DATE
A	PRE–PRODUCTION RELEASE			

1	511000	
QTY	USED ON ASSY	
REMOVE ALL SHARP EDGES AND BURRS		
DO NOT SCALE DWG		
MFG APPVL		
ENGRG APPVL		
DRAWN BY	KIK	1/10/00

CoRE

DIMENSIONS ARE IN INCHES UNLESS OTHERWISE SPECIFIED

TOLERANCES ARE:
X.X ± .03
X.XX ± .01
X.XXX ± .005
ANGLES ± 0°30'

TITLE ASSY–PEDAL

MATERIAL SEE BOM
FINISH –

CAD OBJECT SCALE 1/1

PART NO 511013
SHEET 1 OF 2

CoRE labs ENGLEWOOD, CO U.S.A.
T. 303.761.0131 F. 303.948.8913 www.corelabshome.com
FORM: MANUAL-05-ATLAS

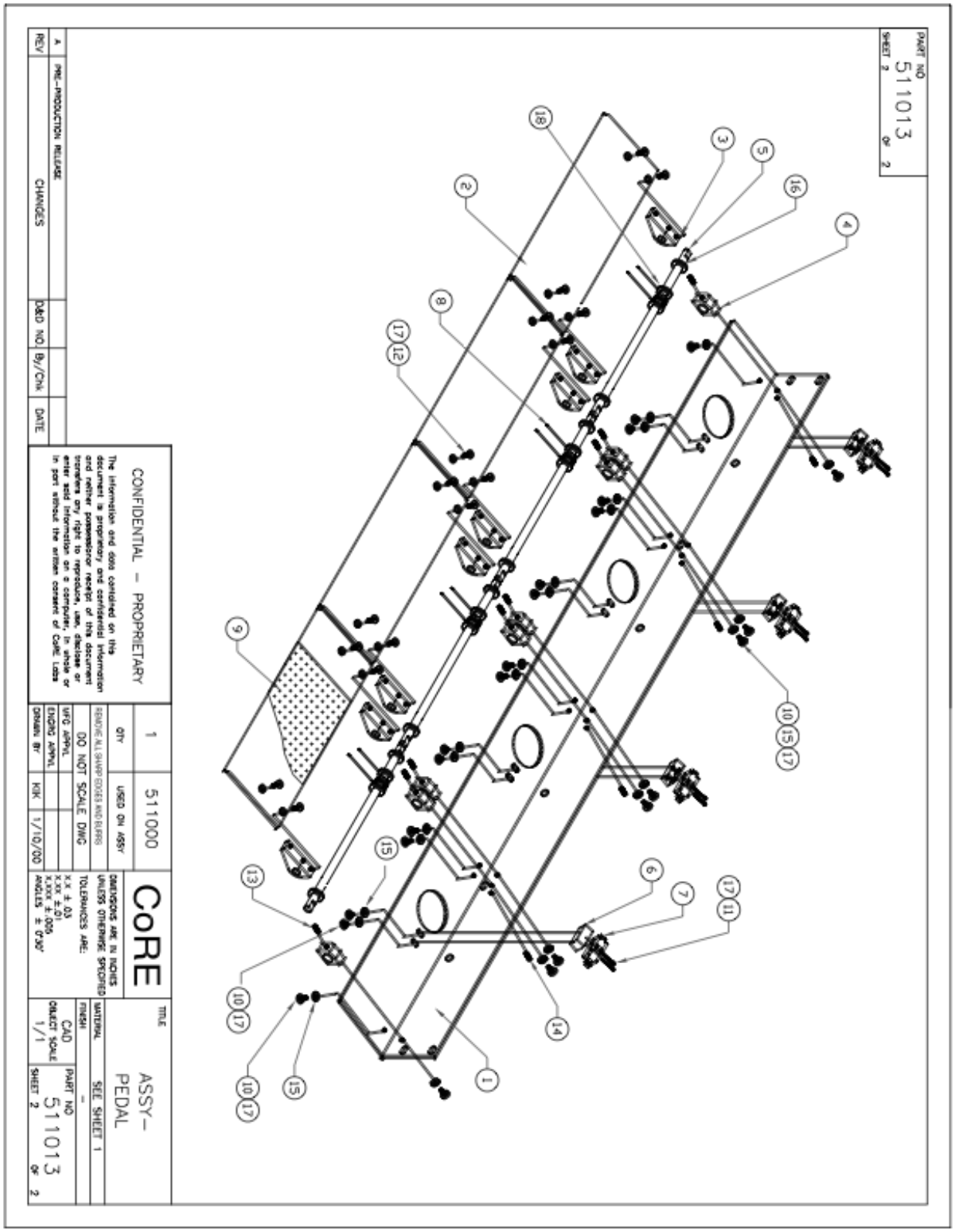
PART NO
511013
SHEET 2 OF 2
REV
CHANGES
D&D NO.
By/Chk
DATE
A
PRE-PRODUCTION RELEASE
CONFIDENTIAL – PROPRIETARY
The information and data contained on this document is proprietary and confidential information and neither possession or receipt of this document transfers any right to reproduce, use, disclose or enter said information on a computer, in whole or in part without the written consent of CoRE Labs
1
QTY
511000
USED ON ASSY
CoRE
REMOVE ALL SHARP EDGES AND BURRS
DO NOT SCALE DWG
MFG APPVL
ENGRG APPVL
DRAWN BY
KSK
1/10/00
DIMENSIONS ARE IN INCHES UNLESS OTHERWISE SPECIFIED
TOLERANCES ARE:
X.X ± .03
X.XX ± .01
X.XXX ± .005
ANGLES ± 0°30'
TITLE
ASSY-
PEDAL
MATERIAL
SEE SHEET 1
FINISH
-
CAD
OBJECT SCALE
1/1
PART NO
511013
SHEET 2 OF 2
1
2
3
4
5
6
7
8
9
10
11
12
13
14
15
16
17
18

PART NO 511018
SHEET 1 OF 2

19	912-0420-10-04	HHMS 1/4-20x5/8	2
20	912-0420-20-04	HHMS 1/4-20x1-1/4	4
21	901-0524-12-01	HSHMS 5/16-24x3/4	6
22	915-0524-08-02	HSSET 5/16-24x1/2	6
23	931006	LOCK WASHER #10	6
24	930008	FLAT WASHER #10	4
25	930012	FLAT WASHER 1/4	4
26	940004	EXTERNAL RETAINING RING SH-37	2
27	926004	BEARING 3/8x7/8x9/32	6
28	990001	LOCTITE-BLUE	A/R

BILL OF MATERIAL

ITEM	PART NO.	DESCRIPTION	QTY
1	937002	SHIM	2
2	531040	ECCENTRIC	2
3	926007	BEARING 3/8x7/8x7/32	2
4	931008	WASHER 1/4 LOCK	2
5	531218	SUPPORT-SHAFT	2
6	531164	SHAFT	2
7	511026	BLOCK & BRG ASS'Y	6
8	531149	ECCENTRIC	4
9	571150	BUMPER	6
10	541151	PLATE-BUMPER NUT	4
11	511028	BLOCK & BUSHING ASS'Y	4
12	531060	STUD/PIN-BEARING	2
13	521029	FRAME WELD ASS'Y	1
14	541158	STRIP-LOCK	2
15	910-0632-04-20	FHMSPU 6-32x1/4	4
16	903-032-12-20	HSFHMS 10-32x3/4	8
17	904-032-16-20	PHMSP 10-32x1	4
18	903-032-16-20	HSFHMS 10-32x1	10

REV	CHANGES	D&D NO.	By/Chk	DATE
A	PRE-PRODUCTION RELEASE	x	V.D.	x

QTY	USED ON ASSY
1	511000

REMOVE ALL SHARP EDGES AND BURRS
DO NOT SCALE DWG

MFG APPVL		
ENGRG APPVL		
DRAWN BY	V.D.	1/22/03

CoRE

DIMENSIONS ARE IN INCHES UNLESS OTHERWISE SPECIFIED
TOLERANCES ARE:
X.X ± .03
X.XX ± .01
X.XXX ± .005
ANGLES ± 0°30'

TITLE ASSY- TABLE TOP MODULE
MATERIAL SEE BOM
FINISH
CAD
OBJECT SCALE 1/1
PART NO 511018
SHEET 1 OF 2

CoRE labs ENGLEWOOD, CO U.S.A.
T. 303.761.0131 F. 303.948.8913 www.corelabshome.com
FORM: MANUAL-05-ATLAS

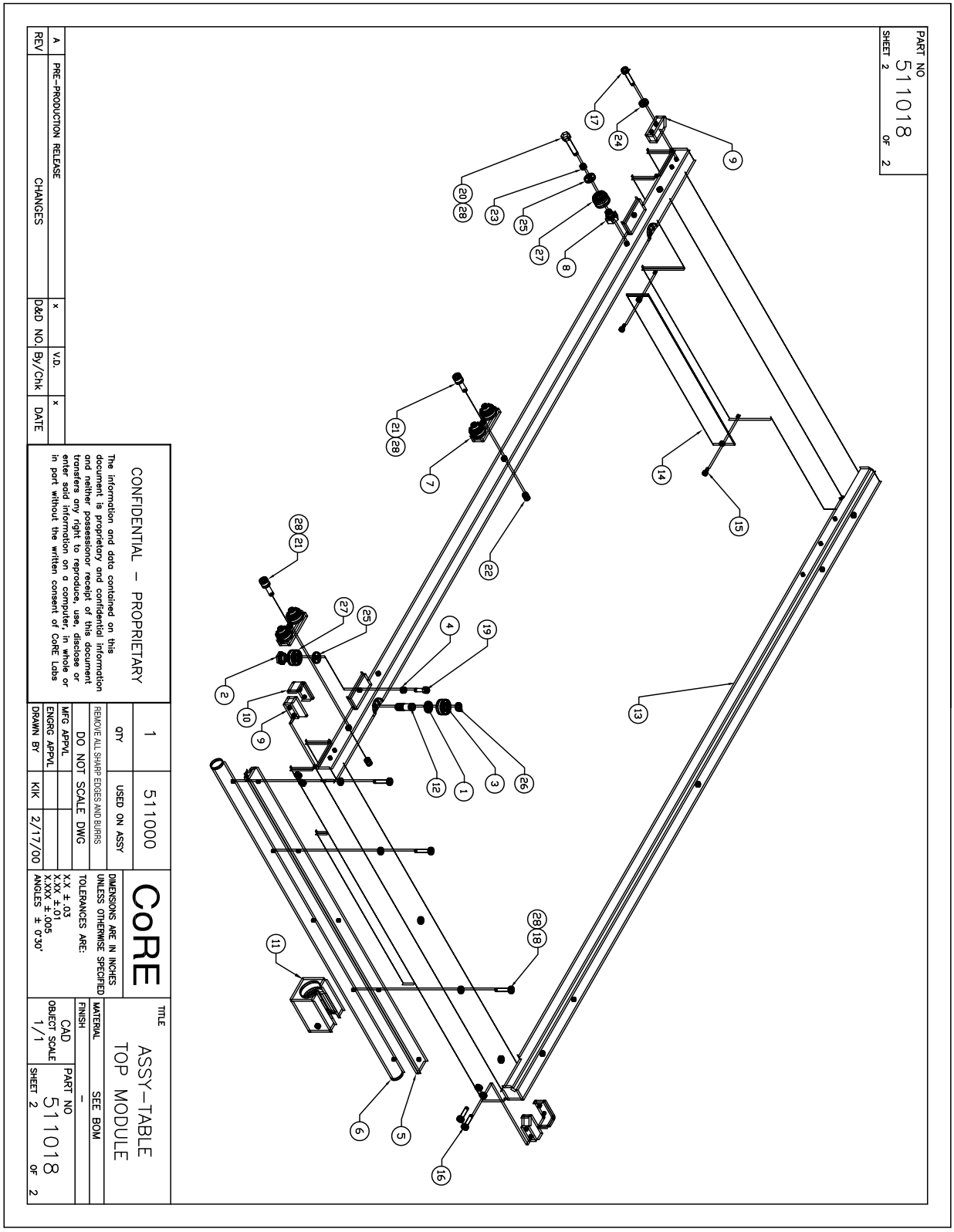
PART NO
511018
SHEET 2 OF 2
REV
A
PRE-PRODUCTION RELEASE
CHANGES
D&D NO.
By/Chk
V.D.
DATE
CONFIDENTIAL – PROPRIETARY
The information and data contained on this document is proprietary and confidential information and neither possessionor receipt of this document transfers any right to reproduce, use, disclose or enter said information on a computer, in whole or in part without the written consent of CoRE Labs
QTY
1
USED ON ASSY
511000
REMOVE ALL SHARP EDGES AND BURRS
DO NOT SCALE DWG
MFG APPVL
ENGRG APPVL
DRAWN BY
KIK
2/17/00
CoRE
DIMENSIONS ARE IN INCHES
UNLESS OTHERWISE SPECIFIED
TOLERANCES ARE:
X.XX ± .03
X.XXX ± .01
X.XXX ± .005
ANGLES ± 0°30'
TITLE
ASSY-TABLE
TOP MODULE
MATERIAL
SEE BOM
FINISH
-
CAD
OBJECT SCALE
1/1
PART NO
511018
SHEET 2 OF 2

PART NO
511022
SHEET 1 OF 1

BILL OF MATERIAL

ITEM	PART NO.	DESCRIPTION	QTY
1	521021	MAGNETIC LOCK BRACKET	1
2	521016	LONG LOCK BRACKET	1
3	531170	WHEEL–MAGNETIC LOCK	4
4	551172	MAGNETIC HOLDING	2
5	944001	RETAINING RING 3/32 , SELF–LOCKING, EXT.	4
6	902–032–08–02	SCR. #10–32x1/2 BHMS	2
7	934007	NUT #10–32, NYLON INSERT	2
8	915–1–0832–04–02	SCR. #8–32x1/4, SET	2
9	E03–007–007	Amp PIN & HOUSING 2 V pos. .093– MOLEX	1
10	E18–001–005	HEAT SHRINK TUBING ø1/4	5"

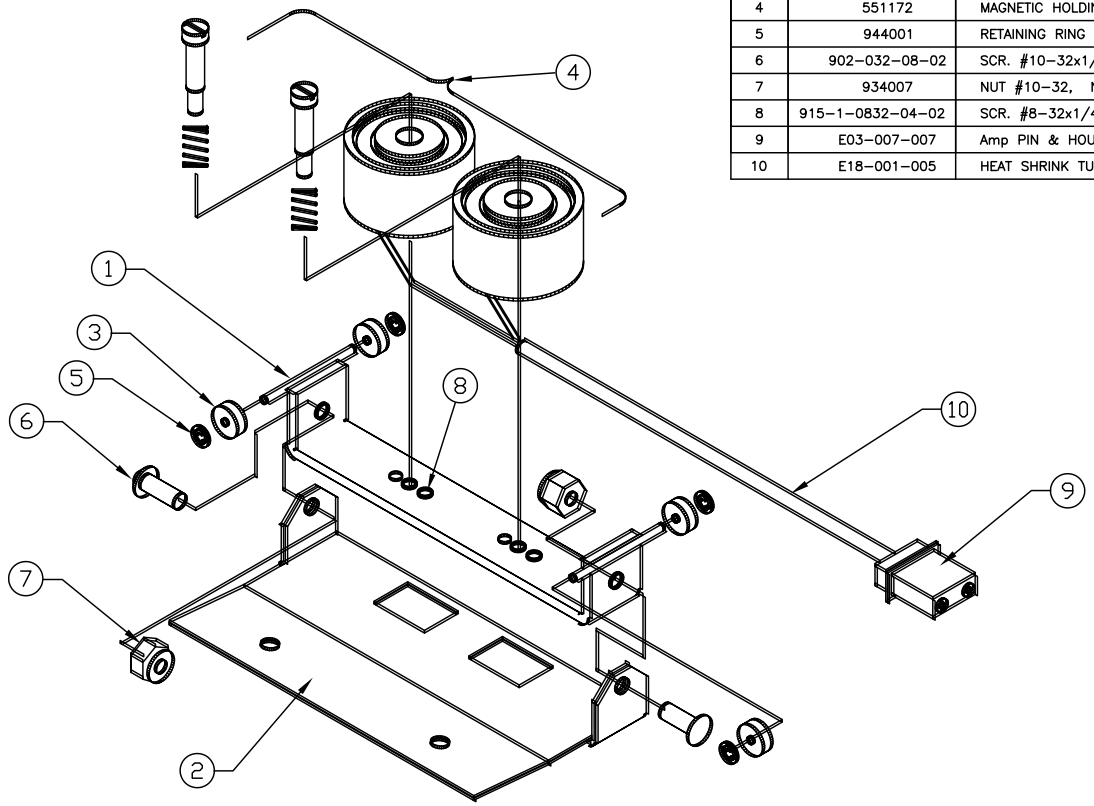

REV	CHANGES	D&D NO.	By/Chk	DATE
A	PRE–PRODUCTION RELEASE		V.D.	2/17/00

CONFIDENTIAL – PROPRIETARY

The information and data contained on this document is proprietary and confidential information and neither possessionor receipt of this document transfers any right to reproduce, use, disclose or enter said information on a computer, in whole or in part without the written consent of CoRE Labs

QTY	USED ON ASSY
1	511000

REMOVE ALL SHARP EDGES AND BURRS

DO NOT SCALE DWG

MFG APPVL		
ENGRG APPVL		
DRAWN BY	KIK	02/17/00

CoRE

DIMENSIONS ARE IN INCHES UNLESS OTHERWISE SPECIFIED

TOLERANCES ARE:
X.X ± .03
X.XX ± .01
X.XXX ± .005
ANGLES ± 0°30'

TITLE
ASSY–LONG TOP LOCK

MATERIAL SEE BOM
FINISH

CAD
OBJECT SCALE 1/1

PART NO
511022
SHEET 1 OF 1

CoRE labs ENGLEWOOD, CO U.S.A.
T. 303.761.0131 F. 303.948.8913 www.corelabshome.com
FORM: MANUAL-05-ATLAS

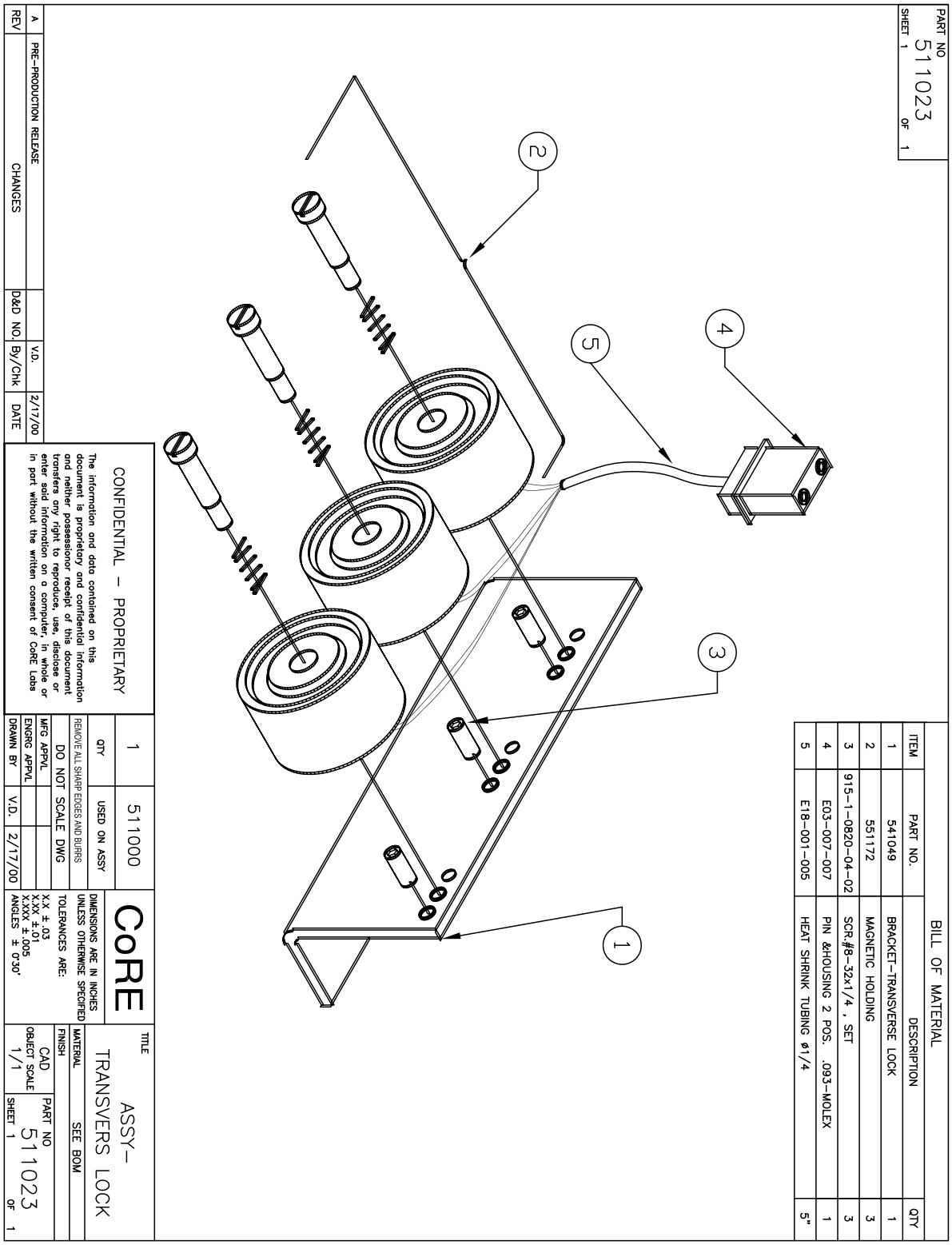
PART NO
511023
SHEET 1 OF 1
BILL OF MATERIAL
ITEM | PART NO. | DESCRIPTION | QTY
1 | 541049 | BRACKET-TRANSVERSE LOCK | 1
2 | 551172 | MAGNETIC HOLDING | 3
3 | 915-1-0820-04-02 | SCR.#8-32x1/4 , SET | 3
4 | E03-007-007 | PIN &HOUSING 2 POS. .093-MOLEX | 1
5 | E18-001-005 | HEAT SHRINK TUBING ø1/4 | 5"
1
2
3
4
5
REV | CHANGES | D&D NO. | By/Chk | DATE
A | PRE-PRODUCTION RELEASE | V.D. | 2/17/00
CONFIDENTIAL - PROPRIETARY
The information and data contained on this document is proprietary and confidential information and neither possession or receipt of this document transfers any right to reproduce, use, disclose or enter said information on a computer, in whole or in part without the written consent of CoRE Labs
1 | 511000
QTY | USED ON ASSY
REMOVE ALL SHARP EDGES AND BURRS
DO NOT SCALE DWG
MFG APPVL
ENGRG APPVL
DRAWN BY | V.D. | 2/17/00
CoRE
DIMENSIONS ARE IN INCHES UNLESS OTHERWISE SPECIFIED
TOLERANCES ARE:
X.XX ± .03
X.XXX ± .01
X.XXX ± .005
ANGLES ± 0°30'
TITLE
ASSY-
TRANSVERS LOCK
MATERIAL SEE BOM
FINISH
CAD
OBJECT SCALE 1/1
PART NO
511023
SHEET 1 OF 1

PART NO
511024
SHEET 1 OF 1

BILL OF MATERIAL

ITEM	PART NO.	DESCRIPTION	QTY
1	521025	TABLE TOP FRAME	1
2	531162	TABLE TOP – FLAT	1
3	531134	BAR ACCESSORY	2
4	511019	HAND GRIP ASSEMBLY	2
5	531133	SPACER–ACC. BAR	18
6	902–032–10–02	SCR. #10–32x5/8 BUTT. HD.	18
7	541135	TRACK–MAGNETIC LOCK	1
8	990010	TAPE FOAM 1.5"	18 FT
9	990011	TAPE FOAM 3.0"	4 FT
10	990003	CLEAR SILICON	A/R

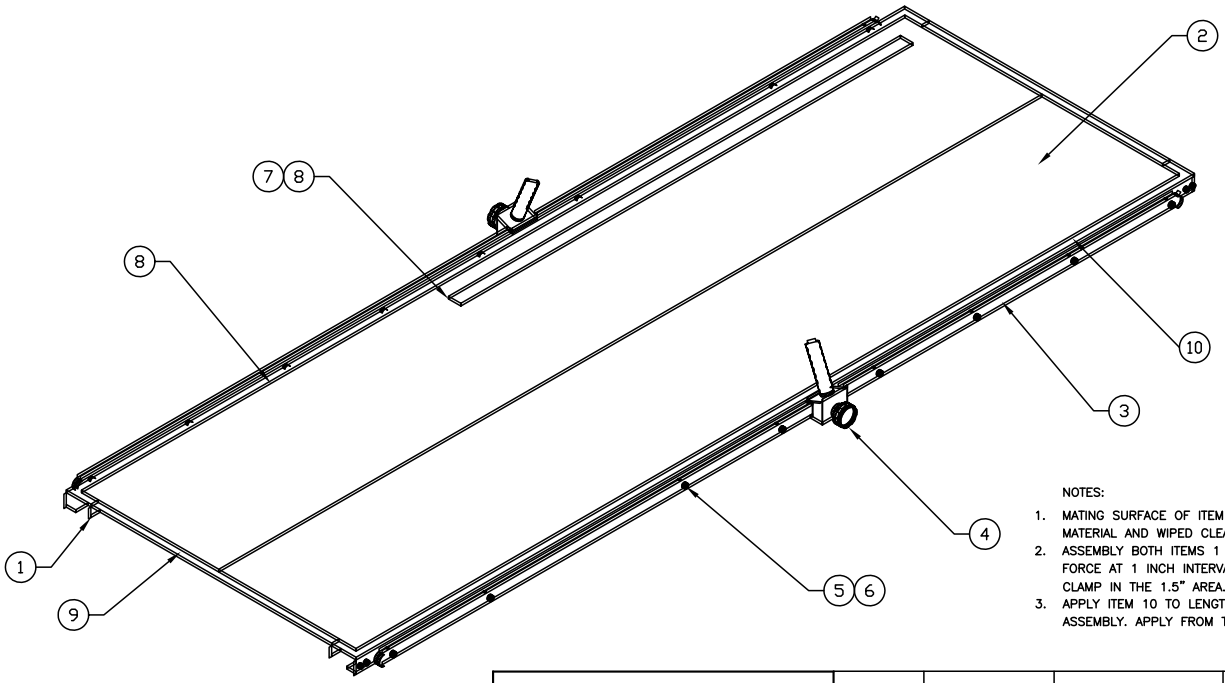

NOTES:

1. MATING SURFACE OF ITEM 1 AND 2 TO BE FREE OF FOREIGN MATERIAL AND WIPED CLEAN WITH TOLUEN TO REMOVE OIL FILM.
2. ASSEMBLY BOTH ITEMS 1 AND 2 IN FIXTURE AND APPLY 100 LBS. FORCE AT 1 INCH INTERVALS AROUND ENTIRE MATING SURFACE. CLAMP IN THE 1.5" AREA.
3. APPLY ITEM 10 TO LENGTH AND WIDTH OF ITEMS 8 AND 9 AFTER ASSEMBLY. APPLY FROM TUBE AND SMOOTH WITH RADIUSED TOOL.

REV	CHANGES	D&D NO.	By/Chk	DATE
A	PRE–PRODUCTION RELEASE		V.D.	2/12/02

QTY	USED ON ASSY
1	511000

REMOVE ALL SHARP EDGES AND BURRS

DO NOT SCALE DWG

MFG APPVL		
ENGRG APPVL		
DRAWN BY	KIK	1/10/00

CoRE

DIMENSIONS ARE IN INCHES UNLESS OTHERWISE SPECIFIED

TOLERANCES ARE:
X.X ± .03
X.XX ± .01
X.XXX ± .005
ANGLES ± 0°30'

TITLE
ASSY–84"
TABLE TOP

MATERIAL SEE BOM
FINISH

CAD OBJECT SCALE 1/1

PART NO 511024
SHEET 1 OF 1

CoRE labs ENGLEWOOD, CO U.S.A.
T. 303.761.0131 F. 303.948.8913 www.corelabshome.com
FORM: MANUAL-05-ATLAS

PART NO
511026
SHEET 1 OF 1

BILL OF MATERIAL

ITEM	PART NO.	DESCRIPTION	QTY
1	930019	SHIM	2
2	926004	BEARING 3/8x7/8x9/32	2
3	531136	BLOCK	1
4	902-0616-10-01	SCR. 3/8-16x5/8 BUTT.HD	2
5	990002	LOCTITE (RED)	A/R

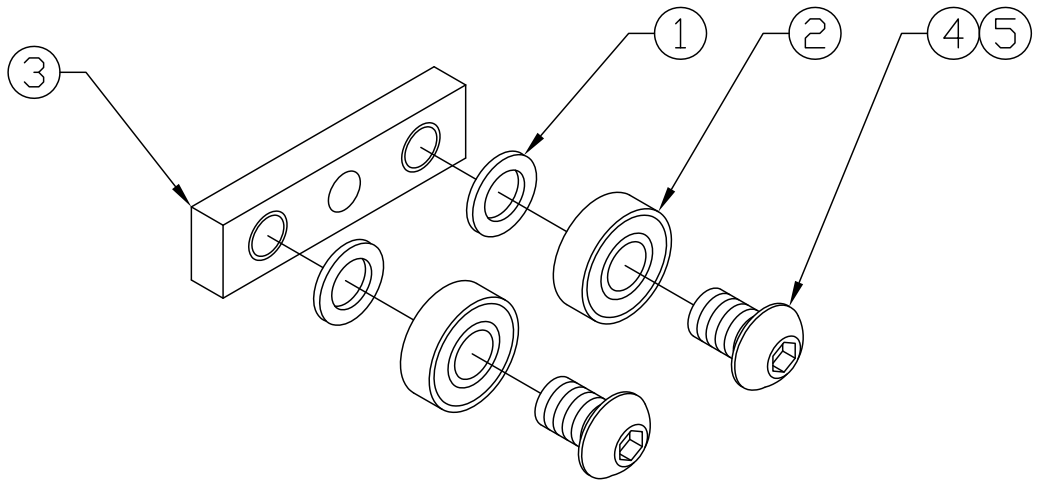

		DATE BY/CHK
		CHANGES
	A	REV

CONFIDENTIAL – PROPRIETARY

QTY	USED ON ASSY
6	511000

DO NOT SCALE DWG

MFG APPVL		
ENGRG APPVL		
DRAWN BY	KJK	02/17/00

DIMENSIONS ARE IN INCHES UNLESS OTHERWISE SPECIFIED TOLERANCES ARE

X.X ± .03
X.XX ± .01
X.XXX ± .005
ANGLES ± 0°30'

CoRE

TITLE
BLOCK & BEARING ASSEMBLY

MATERIAL XXXX
FINISH XXXX
SCALE 1/1
DATE 02/17/00
PART NO 511026
SHEET 1 OF 1

CoRE labs ENGLEWOOD, CO U.S.A.
T. 303.761.0131 F. 303.948.8913 www.corelabshome.com

PART NO
511028
SHEET 1 OF 1

BILL OF MATERIAL

ITEM	PART NO.	DESCRIPTION	QTY
1	551041	BALL BUSHING–OPEN	1
2	531154	BLOCK–BALL BUSHING	1
3	903–0632–06–20	HSFHMS #6–32x3/8	1

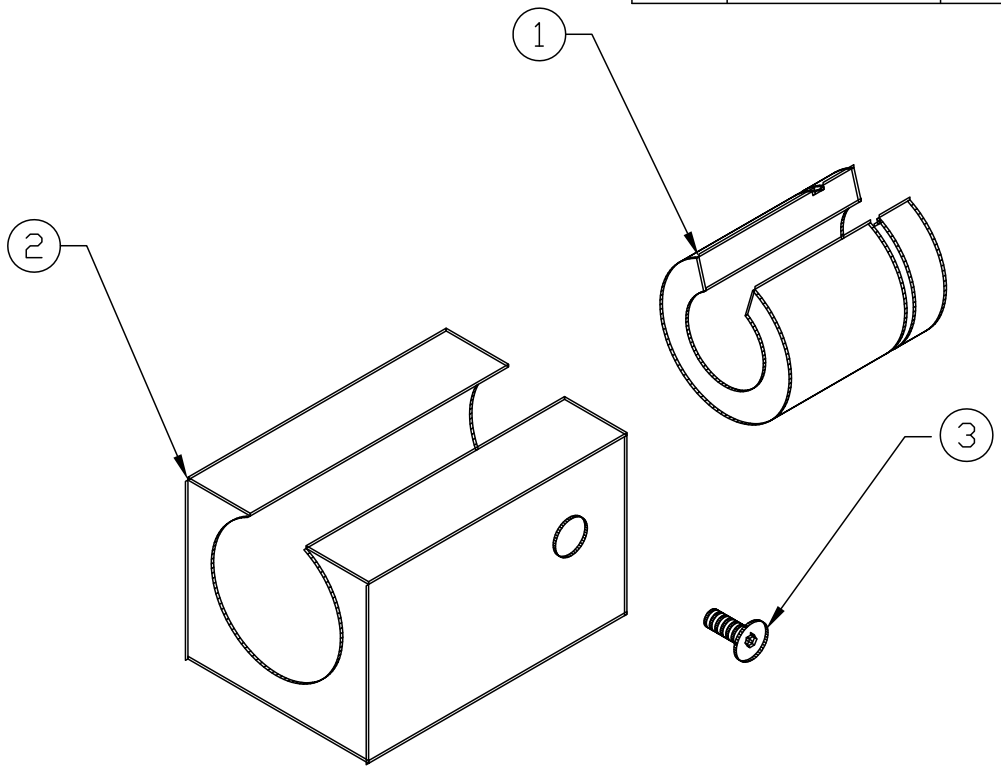

REV	CHANGES	D&D NO.	By/Chk	DATE
A	PRE–PRODUCTION RELEASE			

QTY	USED ON ASSY
1	511018

REMOVE ALL SHARP EDGES AND BURRS

DO NOT SCALE DWG

MFG APPVL		
ENGRG APPVL		
DRAWN BY	V.D.	1/20/03

CoRE

DIMENSIONS ARE IN INCHES UNLESS OTHERWISE SPECIFIED

TOLERANCES ARE:
X.X ± .03
X.XX ± .01
X.XXX ± .005
ANGLES ± 0°30'

TITLE
ASSY–BLOCK& BALL BUSHING

MATERIAL SEE BOM
FINISH –

CAD
OBJECT SCALE 1/1

PART NO
511028
SHEET 1 OF 1

CoRE labs ENGLEWOOD, CO U.S.A.
T. 303.761.0131 F. 303.948.8913 www.corelabshome.com
FORM: MANUAL-05-ATLAS

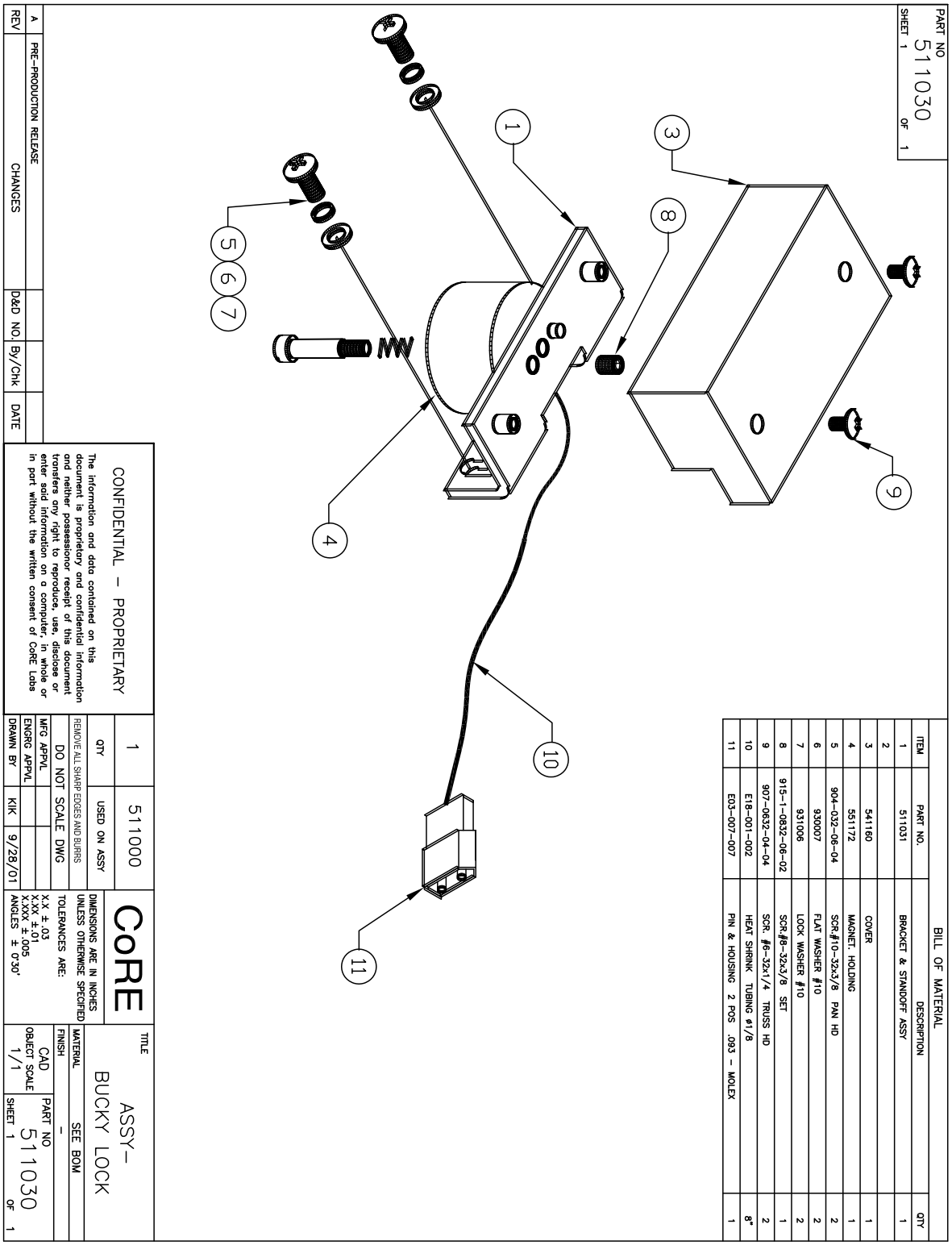

BILL OF MATERIAL

ITEM	PART NO.	DESCRIPTION	QTY
1	511031	BRACKET & STANDOFF ASSY	1
2			
3	541160	COVER	1
4	551172	MAGNET, HOLDING	1
5	904-032-06-04	SCR,#10-32x3/8 PAN HD	2
6	930007	FLAT WASHER #10	2
7	931006	LOCK WASHER #10	2
8	915-1-0832-06-02	SCR,#8-32x3/8 SET	1
9	907-0632-04-04	SCR, #6-32x1/4 TRUSS HD	2
10	E18-001-002	HEAT SHRINK TUBING #1/8	8"
11	E03-007-007	PIN & HOUSING 2 POS .093 - MOLEX	1

REV	CHANGES	D&D NO.	By/Chk	DATE
A	PRE-PRODUCTION RELEASE			

CONFIDENTIAL - PROPRIETARY

The information and data contained on this document is proprietary and confidential information and neither possessionor receipt of this document transfers any right to reproduce, use, disclose or enter said information on a computer, in whole or in part without the written consent of CoRE Labs

QTY	USED ON ASSY
1	511000

REMOVE ALL SHARP EDGES AND BURRS

DO NOT SCALE DWG

MFG APPVL
ENGRG APPVL
DRAWN BY KJK 9/28/01

CoRE

DIMENSIONS ARE IN INCHES UNLESS OTHERWISE SPECIFIED

TOLERANCES ARE:
X.X ± .03
X.XX ± .01
X.XXX ± .005
ANGLES ± 0°30'

TITLE
ASSY-
BUCKY LOCK

MATERIAL SEE BOM
FINISH -

CAD OBJECT SCALE 1/1

PART NO 511030
SHEET 1 OF 1

PART NO 511034
SHEET 1 OF 1

BILL OF MATERIAL

ITEM	PART NO.	DESCRIPTION	QTY
1	551168	PUSH-BUTTON SWITCH 3A,125V-SB40	1
2	551169	ROUND SHROUD AT455A	1
3	E19-001-2005	WIRE 20Ga ALPHA TEFLON UL 1213 GRN	2x13"
4	E03-003-014	TERM. CRIMP .062 MOLEX 02-06-1103	2
5	E03-006-009	RECEPT .062 2POS. MOLEX 02-06-1023	1
6	E18-001-002	HEAT SHRINK 1/8 FIT 221 BLK.	12"

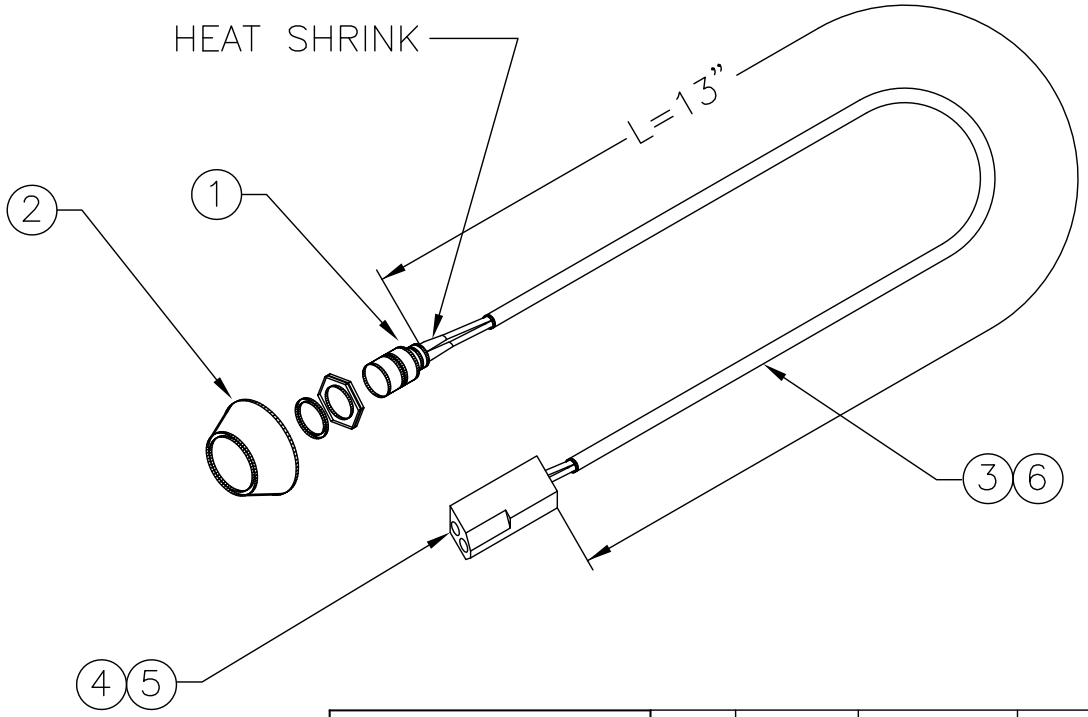

REV	CHANGES	D&D NO.	By/Chk	DATE
A	PRE-PRODUCTION RELEASE		V.D.	12/11/03

QTY	USED ON ASSY
1	511040

REMOVE ALL SHARP EDGES AND BURRS

DO NOT SCALE DWG

MFG APPVL		
ENGRG APPVL		
DRAWN BY	V.D.	12/11/03

CoRE

DIMENSIONS ARE IN INCHES UNLESS OTHERWISE SPECIFIED

TOLERANCES ARE:
X.X ± .03
X.XX ± .01
X.XXX ± .005
ANGLES ± 0°30'

TITLE ASSY– BUCKY SWITCH

MATERIAL SEE BOM

FINISH

CAD OBJECT SCALE 1/1

PART NO 511034

SHEET 1 OF 1

CoRE labs ENGLEWOOD, CO U.S.A.
T. 303.761.0131 F. 303.948.8913 www.corelabshome.com
FORM: MANUAL-05-ATLAS

PART NO
511040
SHEET 1 OF 1

BILL OF MATERIALS

ITEM	PART NO.	DESCRIPTION	Q'TY
1	521206	WELD.–FRAME	1
2	511034	SWITCH–BUCKY LOCK	1
3	531043	SPACER–BEARING	2
4	531044	STUD–ECCENTRIC	2
5	531045	SCREW–BEARING	2
6	531173	BEARING SPACER	2
7	926007	BEARING 3/8"x7/8"x.216 – R6	2
8	926002	BEARING 3/16x1/2x.194 R3ZZ	4
9	926003	BEARING 1/4"x3/4"x.279 R6ZZ	2
10	922006	NUT–KEPS #8–32	4
11	922007	NUT–KEPS #10–32	4
12	904–032–24–04	PHMSP #10–32x1.50	2
13	904–032–20–04	PHMSP #10–32x1.25	2
14	931008	LOCK WASHER #8	2
15	931005	WASHER .176x.298x.02	2
16	930007	FLAT WASHER #10	2
17	981007	PLUG ø1.09	1

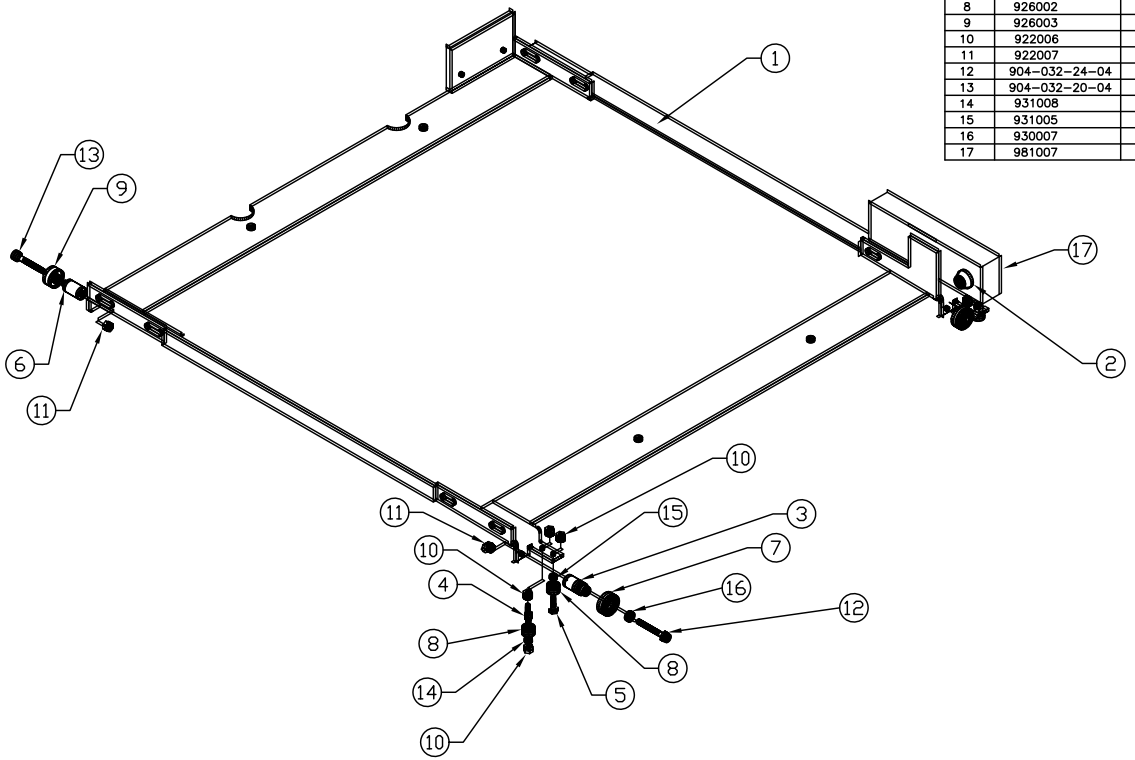

REV	CHANGES	D&D NO.	By/Chk	DATE
A	PRE–PRODUCTION RELEASE			

CONFIDENTIAL – PROPRIETARY

The information and data contained on this document is proprietary and confidential information and neither possessionor receipt of this document transfers any right to reproduce, use, disclose or enter said information on a computer, in whole or in part without the written consent of CoRE Labs

QTY	USED ON ASSY
1	511000

REMOVE ALL SHARP EDGES AND BURRS

DO NOT SCALE DWG

MFG APPVL		
ENGRG APPVL		
DRAWN BY	KIK	5/25/00

CoRE

DIMENSIONS ARE IN INCHES UNLESS OTHERWISE SPECIFIED

TOLERANCES ARE:
X.X ±.03
X.XX ±.01
X.XXX ±.005
ANGLES ± 0°30'

TITLE
ASSY–BUCKY MOUNTING FRAME

MATERIAL SEE BOM
FINISH –

CAD OBJECT SCALE 1/1

PART NO 511040
SHEET 1 OF 1

CoRE labs ENGLEWOOD, CO U.S.A.
T. 303.761.0131 F. 303.948.8913 www.corelabshome.com
FORM: MANUAL-05-ATLAS

PART NO
511211
SHEET 1 OF 1

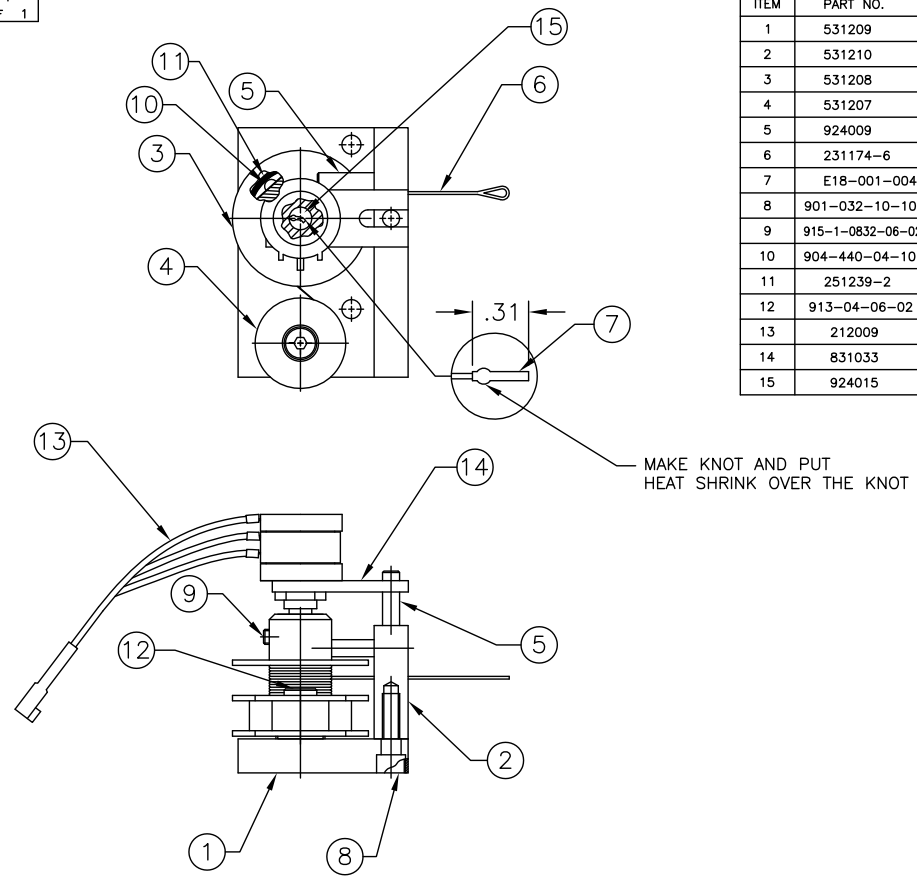

BILL OF MATERIAL

ITEM	PART NO.	DESCRIPTION	QTY
1	531209	PLATE–POT	1
2	531210	PLATE	1
3	531208	PULLEY–POT.	1
4	531207	PULLEY–SPRING	1
5	924009	DOWELL PIN 3/16x1"	2
6	231174–6	CABLE	1
7	E18–001–004	HEAT SHRINK I.D. 3/32	.31"
8	901–032–10–10	SCR #10–32–5/8 SHMS	2
9	915–1–0832–06–02	SCR #8–32–3/8 SET	1
10	904–440–04–10	SCR #4–40x1/4 PHMS, PAN	1
11	251239–2	MOTOR SPRING	1
12	913–04–06–02	SCR 1/4x3/8x10–24 SHOULDER	1
13	212009	POTENTIOMETER 1K 10 TURNS ASSY	1
14	831033	KEEPER– POT.	1
15	924015	DOWELL PIN 1/4x1	1

REV	CHANGES	By/Chk	DATE
B	ADDED IT. 13 AND IT 14.	E.G.	12.11.01
A	PRE–PRODUCTION RELEASE	E.G.	09.05.01

QTY	USED ON ASSY
1	511000

REMOVE ALL SHARP EDGES AND BURRS

DO NOT SCALE DWG

MFG APPVL		
ENGRG APPVL		
DRAWN BY	E.G.	09.05.01

CoRE

DIMENSIONS ARE IN INCHES UNLESS OTHERWISE SPECIFIED

TOLERANCES ARE:
X.X ± .03
X.XX ± .01
X.XXX ± .005
ANGLES ± 0°30'

TITLE
OPTION
ASSY–POT.

MATERIAL SEE B/M
FINISH ------

CAD
OBJECT SCALE 1/1

PART NO
511211
SHEET 1 OF 1

CoRE labs ENGLEWOOD, CO U.S.A.
T. 303.761.0131 F. 303.948.8913 www.corelabshome.com
FORM: MANUAL-05-ATLAS

This Page Intentionally Left Blank